2024 MULE™ 4010 TRANS4x4® FE

PARTS DIAGRAM

Crankshaft/Piston(s)

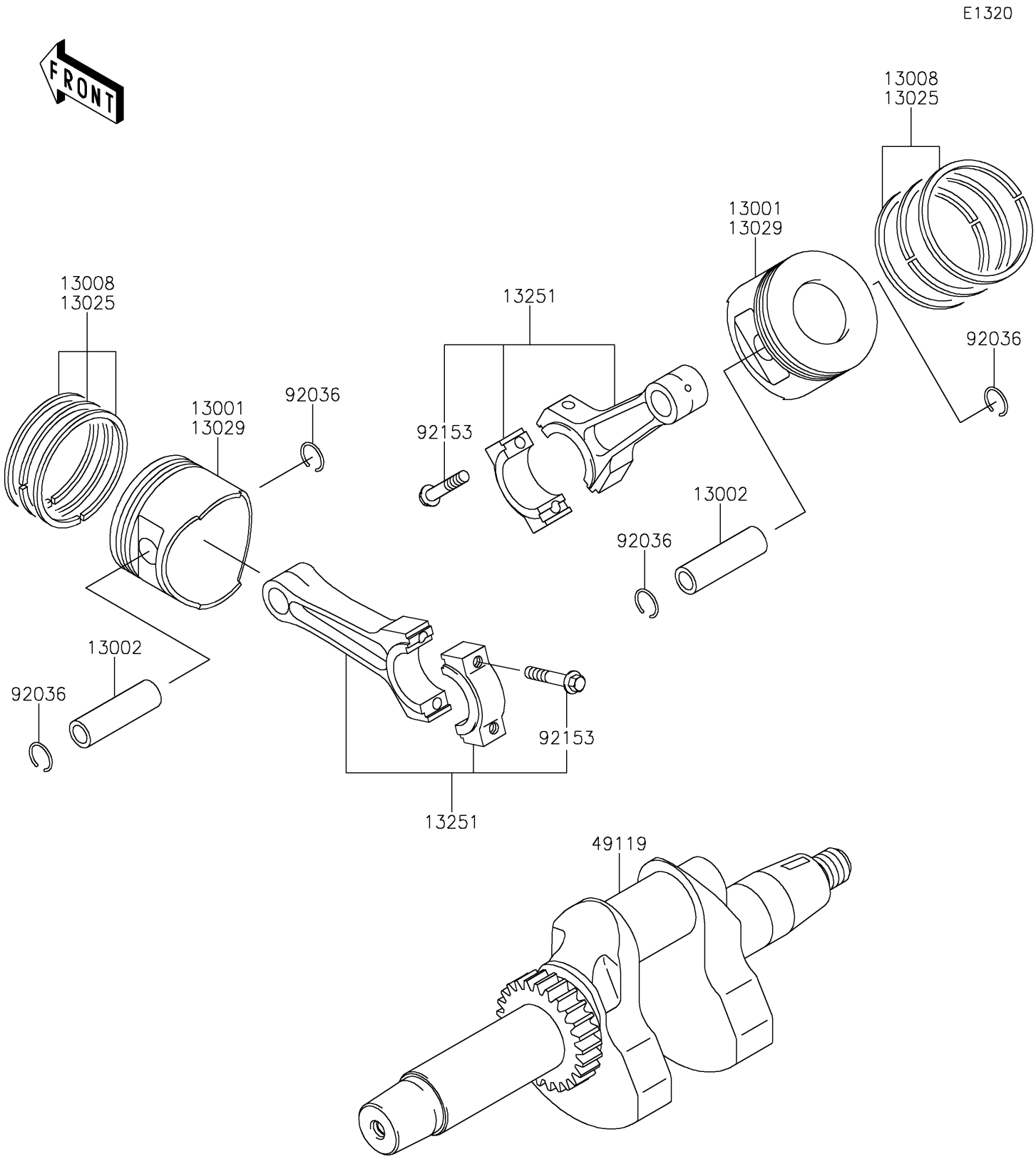

© 2026 Kawasaki Motors Corp., U.S.A.

2024 MULE™ 4010 TRANS4x4® FE

PARTS LIST

Crankshaft/Piston(s)

ITEM NAME	PART NUMBER	QUANTITY
PISTON-ENGINE,STD (Ref # 13001)	13001-2210	2
PIN-PISTON (Ref # 13002)	13002-1013	2
RING-SET-PISTON,STD (Ref # 13008)	13008-6025	2
RING-SET-PISTON L,0.50 (Ref # 13025)	13025-6008	AR
PISTON-ENGINE L,0.50 (Ref # 13029)	13029-0033	AR
ROD-ASSY-CONNECTING (Ref # 13251)	13251-0737	2
CRANKSHAFT-ASSY (Ref # 49119)	49119-0015	1
RING-SNAP,PISTON PIN (Ref # 92036)	92036-021	4
BOLT,7X35.2 (Ref # 92153)	92153-2054	4

© 2026 Kawasaki Motors Corp., U.S.A.