1991 Zephyr 750

PARTS DIAGRAM

Secondary Shaft

Kawasaki
Let the Good Times Roll®

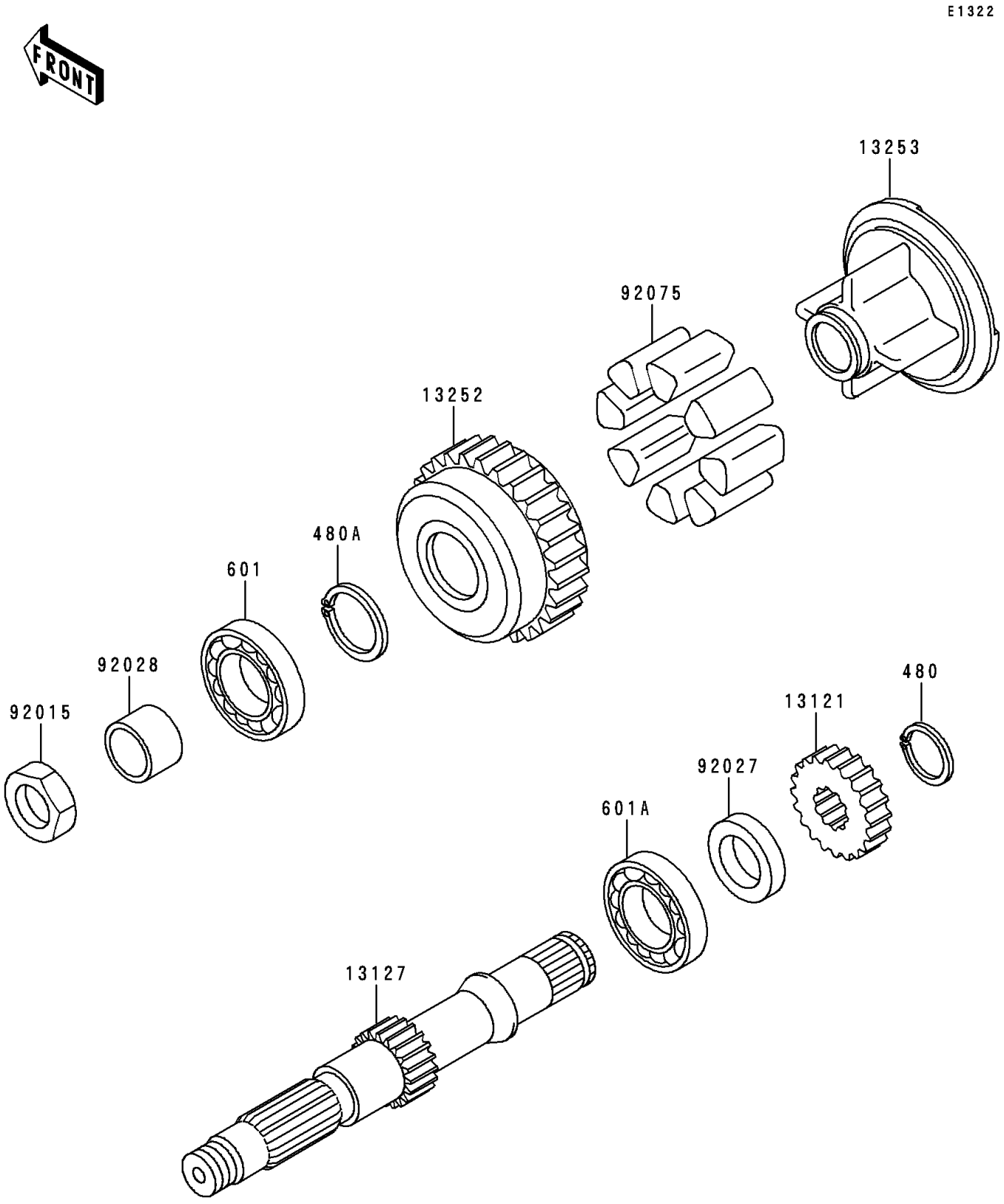

© 2026 Kawasaki Motors Corp., U.S.A.

1991 Zephyr 750

PARTS LIST

Secondary Shaft

ITEM NAME	PART NUMBER	QUANTITY
CIRCLIP-TYPE-C,22MM (Ref # 480)	480J2200	1
CIRCLIP-TYPE-C,28MM (Ref # 480A)	480J2800	1
BEARING-BALL,#6205C3 (Ref # 601)	601B6205	1
BEARING-BALL,#6305C3 (Ref # 601A)	601B6305	1
GEAR,SECONDARY SHAFT,29T (Ref # 13121)	13121-037	1
SHAFT,SECONDARY,L=205 (Ref # 13127)	13127-1019	1
COUPLING,OUTER,SECONDARY SHAFT (Ref # 13252)	13252-001	1
COUPLING,INNER,SECONDARY SHAFT (Ref # 13253)	13253-001	1
NUT,18MM (Ref # 92015)	92015-019	1
COLLAR,23X46X4.5 (Ref # 92027)	92027-263	1
BUSHING,20X25X16.6 (Ref # 92028)	92028-1037	1
DAMPER (Ref # 92075)	92075-1227	8

© 2026 Kawasaki Motors Corp., U.S.A.