1991 Zephyr

PARTS DIAGRAM

Label

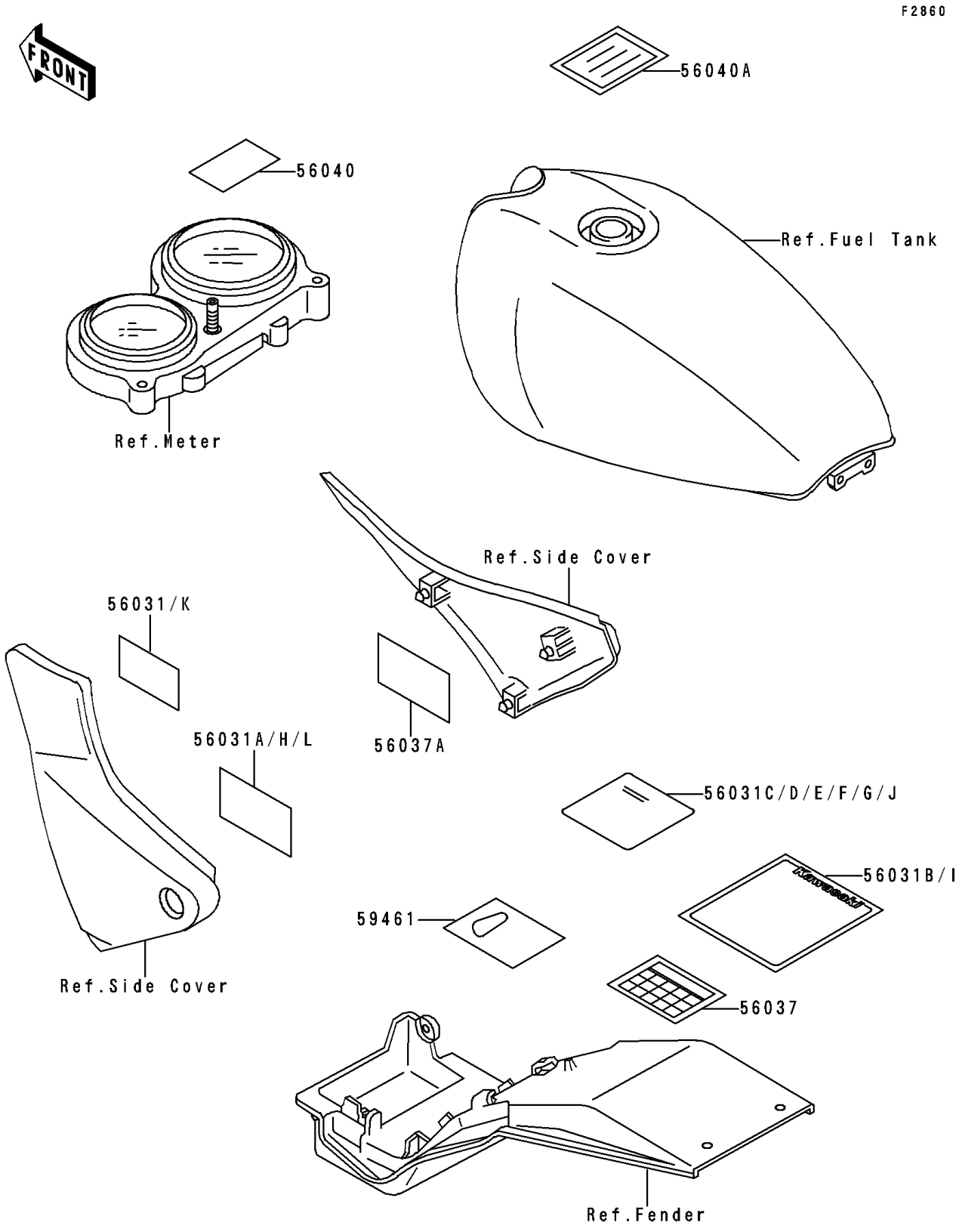

© 2026 Kawasaki Motors Corp., U.S.A.

1991 Zephyr

PARTS LIST

Label

ITEM NAME	PART NUMBER	QUANTITY
LABEL-MANUAL,OIL & OIL FILTER (Ref # 56031)	56031-1093	1
LABEL-MANUAL,DAILY SAFETY (Ref # 56031B)	56031-1694	1
LABEL-MANUAL,BATTERY VENT (Ref # 56031E)	56031-1743	1
LABEL-MANUAL,CHAIN (Ref # 56031H)	56031-1745	1
LABEL-MANUAL,DAILY SAFETY (Ref # 56031I)	56031-1748	1
LABEL-MANUAL,BATTERY VENT (Ref # 56031J)	56031-1759	1
LABEL-MANUAL,OIL&OIL FILTER (Ref # 56031K)	56031-1760	1
LABEL-MANUAL,CHAIN (Ref # 56031L)	56031-1761	1
LABEL-SPECIFICATION,TIRE&LOAD (Ref # 56037)	56037-1503	1
LABEL-SPECIFICATION,TIRE&LOAD (Ref # 56037A)	56037-1538	1
LABEL-WARNING,BREAK IN CAUTION (Ref # 56040)	56040-1007	1
LABEL-WARNING,EVAPO (Ref # 56040A)	56040-1121	1
LABEL-CERTIFICATION,EVAPO ROUT (Ref # 59461)	59461-1491	1

© 2026 Kawasaki Motors Corp., U.S.A.