1991 Zephyr

PARTS DIAGRAM

Tool

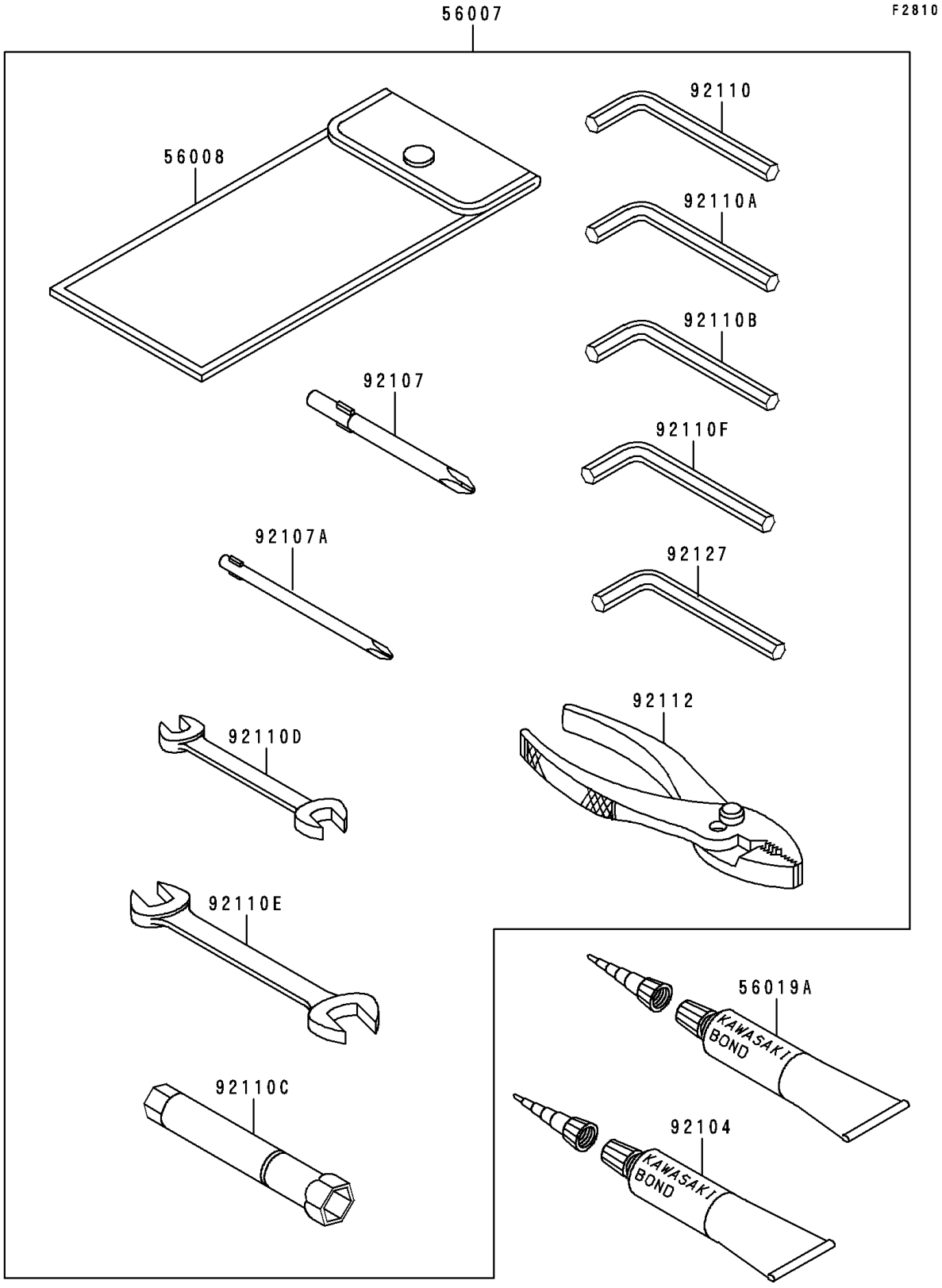

© 2026 Kawasaki Motors Corp., U.S.A.

1991 Zephyr

PARTS LIST

Tool

ITEM NAME	PART NUMBER	QUANTITY
TOOLKIT (Ref # 56007)	56007-1338	1
BAG,TOOL (Ref # 56008)	56008-1019	1
THREE BOND TB1211,HT/RS,WHITE (Ref # 56019A)	56019-120	1
GASKET-LIQUID,TUBE,100G,BLACK (Ref # 92104)	92104-1003	1
TOOL-DRIVER,#3PHILLIPS (Ref # 92107)	92107-005	1
TOOL-DRIVER,#2PHILLIPS (Ref # 92107A)	92107-1053	1
TOOL-WRENCH,ALLEN,5MM (Ref # 92110)	92110-1015	1
TOOL-WRENCH,ALLEN,12MM (Ref # 92110A)	92110-1104	1
TOOL-WRENCH,ALLEN,8MM (Ref # 92110B)	92110-1108	1
TOOL-WRENCH,BOX,18MM (Ref # 92110C)	92110-1111	1
TOOL-WRENCH,OPEN END,10X12 (Ref # 92110D)	92110-1152	1
TOOL-WRENCH,OPEN END,14X17 (Ref # 92110E)	92110-1153	1
TOOL-WRENCH,ALLEN,4MM (Ref # 92110F)	92110-3703	1
TOOL-PLIERS (Ref # 92112)	92112-003	1
TOOL-WRENCH,ALLEN,6MM (Ref # 92127)	92127-003	1

© 2026 Kawasaki Motors Corp., U.S.A.