1991 Zephyr

PARTS DIAGRAM

Seat(&NAMI.JKAZRFB1MA004498)

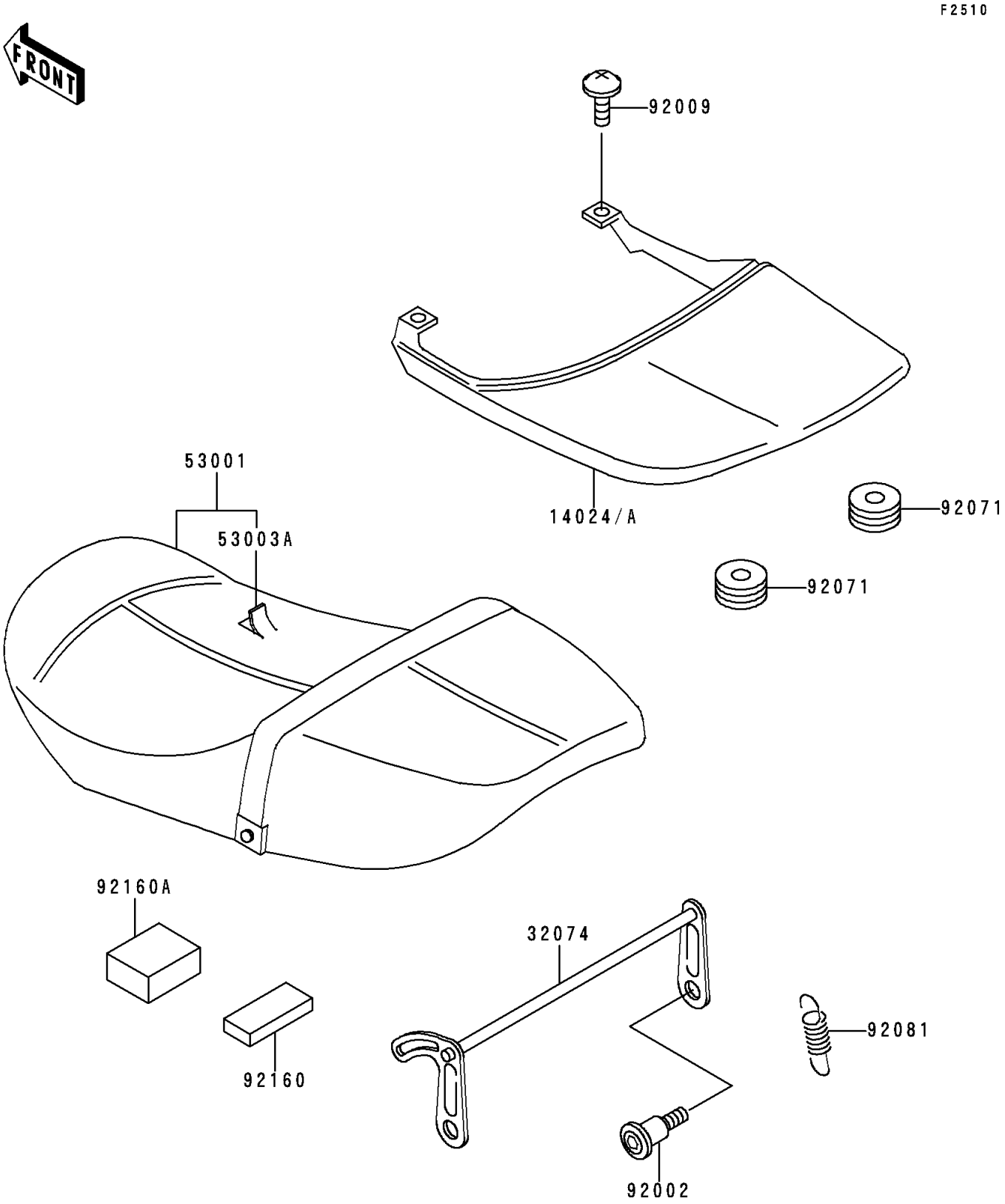

© 2026 Kawasaki Motors Corp., U.S.A.

1991 Zephyr

PARTS LIST

Seat(&NAMI.JKAZRFB1MA004498)

ITEM NAME	PART NUMBER	QUANTITY
COVER,SEAT,C.A.BLUE (Ref # 14024)	14024-1827-FC	1
COVER,SEAT,C.C.RED (Ref # 14024A)	14024-1827-L1	1
BRACKET-LOCK,SEAT (Ref # 32074)	32074-1136	1
SEAT-ASSY,DUAL,W/BAND,BLACK (Ref # 53001)	53001-1613-MA	1
LEATHER,SEAT,BLACK (Ref # 53003A)	53003-1240-MA	1
BOLT,SOCKET,6MM (Ref # 92002)	92002-1616	2
SCREW,6X14 (Ref # 92009)	92009-1288	2
GROMMET (Ref # 92071)	92071-056	2
SPRING (Ref # 92081)	92081-1023	1
DAMPER (Ref # 92160)	92160-1099	2
DAMPER (Ref # 92160A)	92160-1184	1

© 2026 Kawasaki Motors Corp., U.S.A.