1991 Zephyr

PARTS DIAGRAM

Brake Pedal

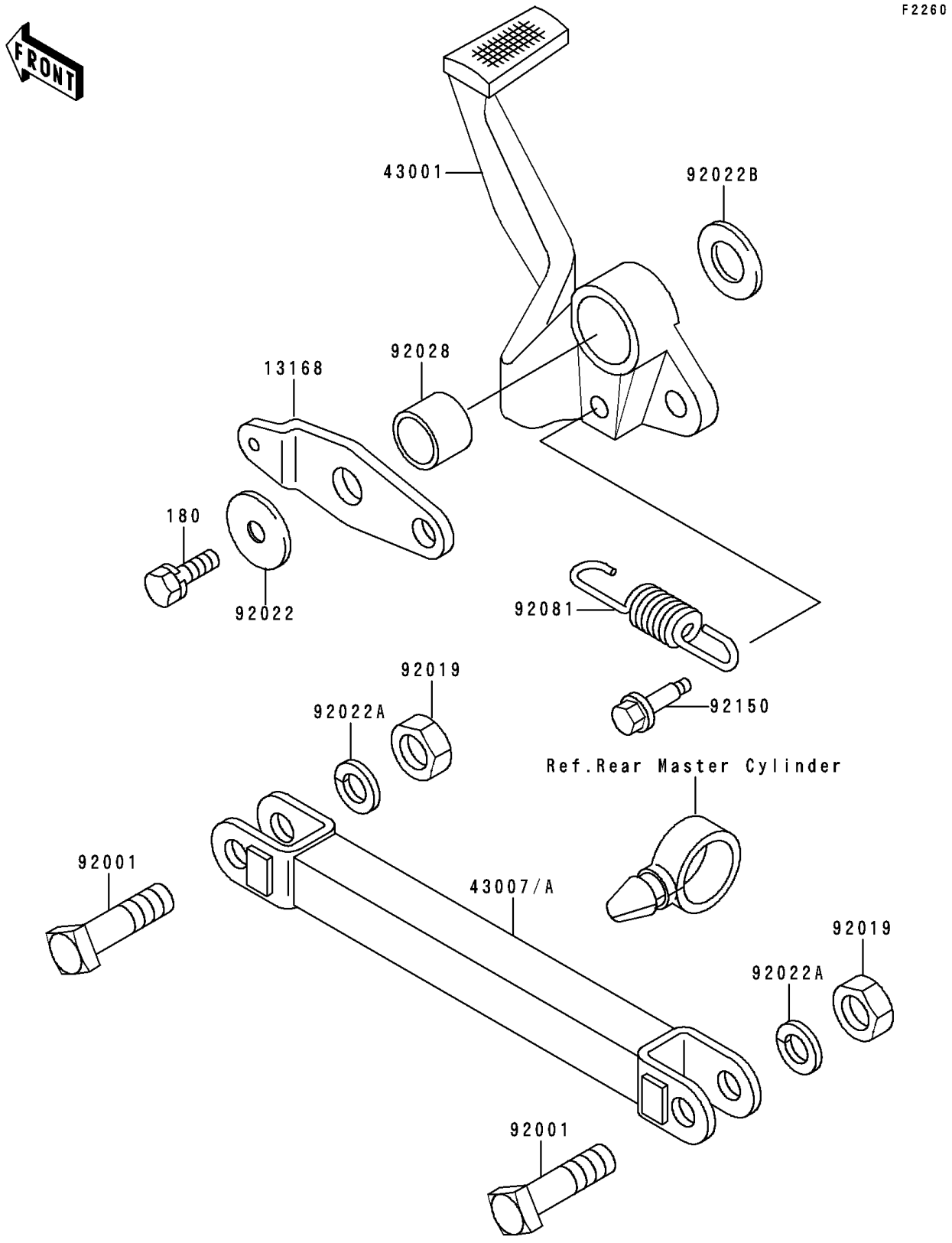

© 2026 Kawasaki Motors Corp., U.S.A.

1991 Zephyr

PARTS LIST

Brake Pedal

ITEM NAME	PART NUMBER	QUANTITY
BOLT-UPSET-WS (Ref # 180)	180H0614	1
LEVER,BRAKE SWITCH (Ref # 13168)	13168-1435	1
LEVER-BRAKE,PEDAL (Ref # 43001)	43001-1276	1
ROD-TORQUE,SILVER NO.25 (Ref # 43007)	43007-1138-CE	1
BOLT,10X37 (Ref # 92001)	92001-1307	2
NUT,LOCK,10MM (Ref # 92019)	92019-021	2
WASHER,7X28X1.6 (Ref # 92022)	92022-1282	1
WASHER,SPRING,10MM (Ref # 92022A)	92022-1540	2
WASHER,15.3X24X1 (Ref # 92022B)	92022-326	1
BUSHING,BRAKE PEDAL (Ref # 92028)	92028-1282	1
SPRING,BRAKE PEDAL (Ref # 92081)	92081-1296	1
BOLT,6MM (Ref # 92150)	92150-1113	1

© 2026 Kawasaki Motors Corp., U.S.A.