1991 Zephyr

PARTS DIAGRAM

Battery Case

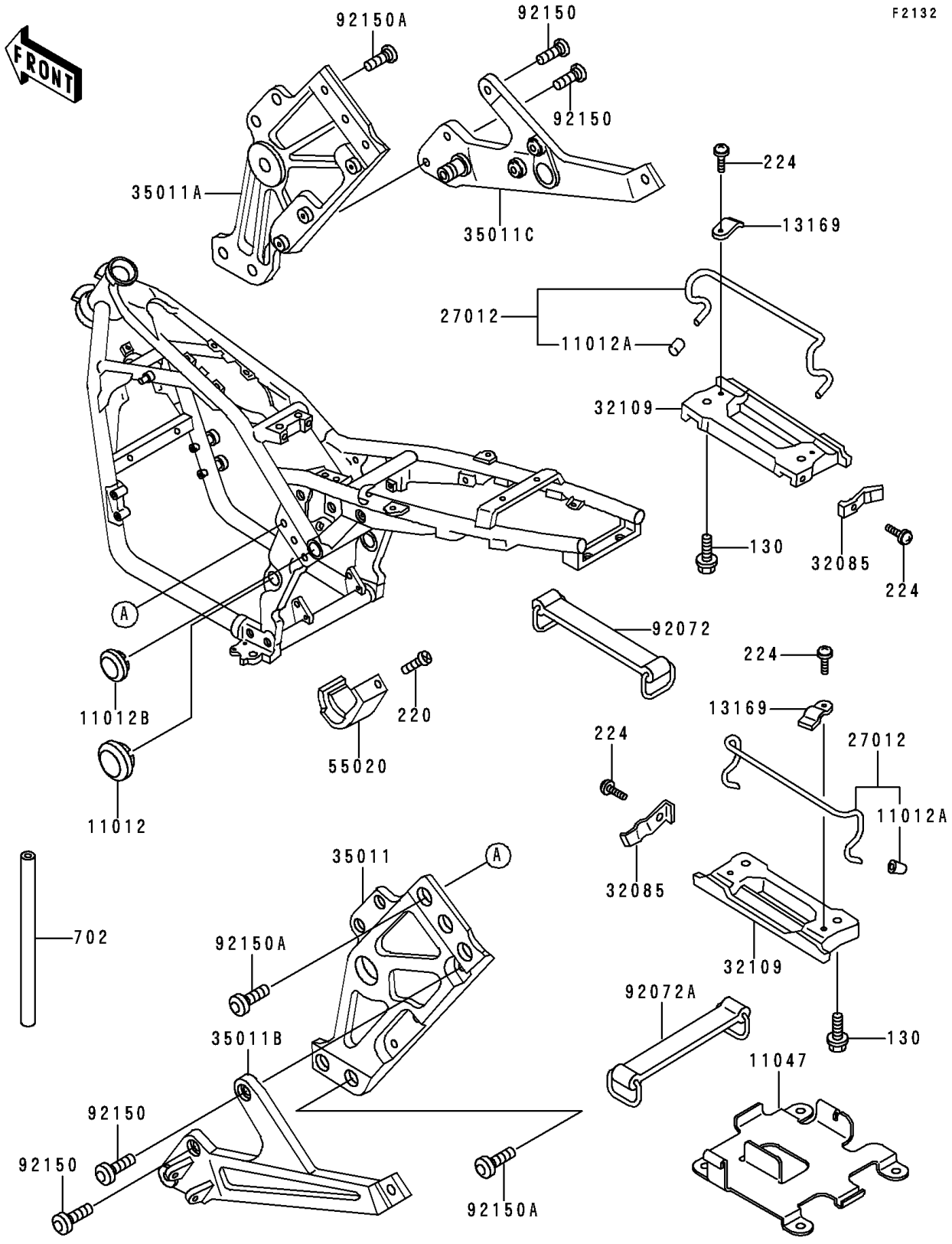

© 2026 Kawasaki Motors Corp., U.S.A.

1991 Zephyr

PARTS LIST

Battery Case

ITEM NAME	PART NUMBER	QUANTITY
BOLT-FLANGED,8X14 (Ref # 130)	130J0814	4
SCREW-PAN-CROS (Ref # 220)	220C0510	1
SCREW-PAN-WP-CROS (Ref # 224)	224C0508	6
TUBE-RUBBER,5X8X500 (Ref # 702)	702A05500	1
CAP,SWING ARM BRACKET (Ref # 11012)	11012-1459	2
CAP,BUNGEE CORD HOOK (Ref # 11012A)	11012-1589	4
CAP,CROSS PIPE,P.C.GRAY (Ref # 11012B)	11012-1717-T2	2
BRACKET,CANISTER (Ref # 11047)	11047-1082	1
PLATE,GRIP (Ref # 13169)	13169-1760	4
HOOK,BUNGEE CORD (Ref # 27012)	27012-1398	2
STOPPER,HOOK (Ref # 32085)	32085-1187	2
GRIP-FRAME (Ref # 32109)	32109-1108	2
STAY,SWING ARM PANEL,LH,C.GRAY (Ref # 35011)	35011-1500-EZ	1
STAY,SWING ARM PANEL,RH,C.GRAY (Ref # 35011A)	35011-1501-EZ	1
STAY,STEP HOLDER,LH,C.GRAY (Ref # 35011B)	35011-1502-EZ	1
STAY,STEP HOLDER,RH,C.GRAY (Ref # 35011C)	35011-1503-EZ	1
GUARD,CHAIN (Ref # 55020)	55020-1361	1
BAND (Ref # 92072)	92072-1176	1
BAND,BATTERY (Ref # 92072A)	92072-1188	1
BOLT,DISC PLATE,8X30 (Ref # 92150)	92150-1132	5
BOLT,SOCKET,10X25 (Ref # 92150A)	92150-1401	10

© 2026 Kawasaki Motors Corp., U.S.A.