1991 Zephyr

PARTS DIAGRAM

Frame Fitting

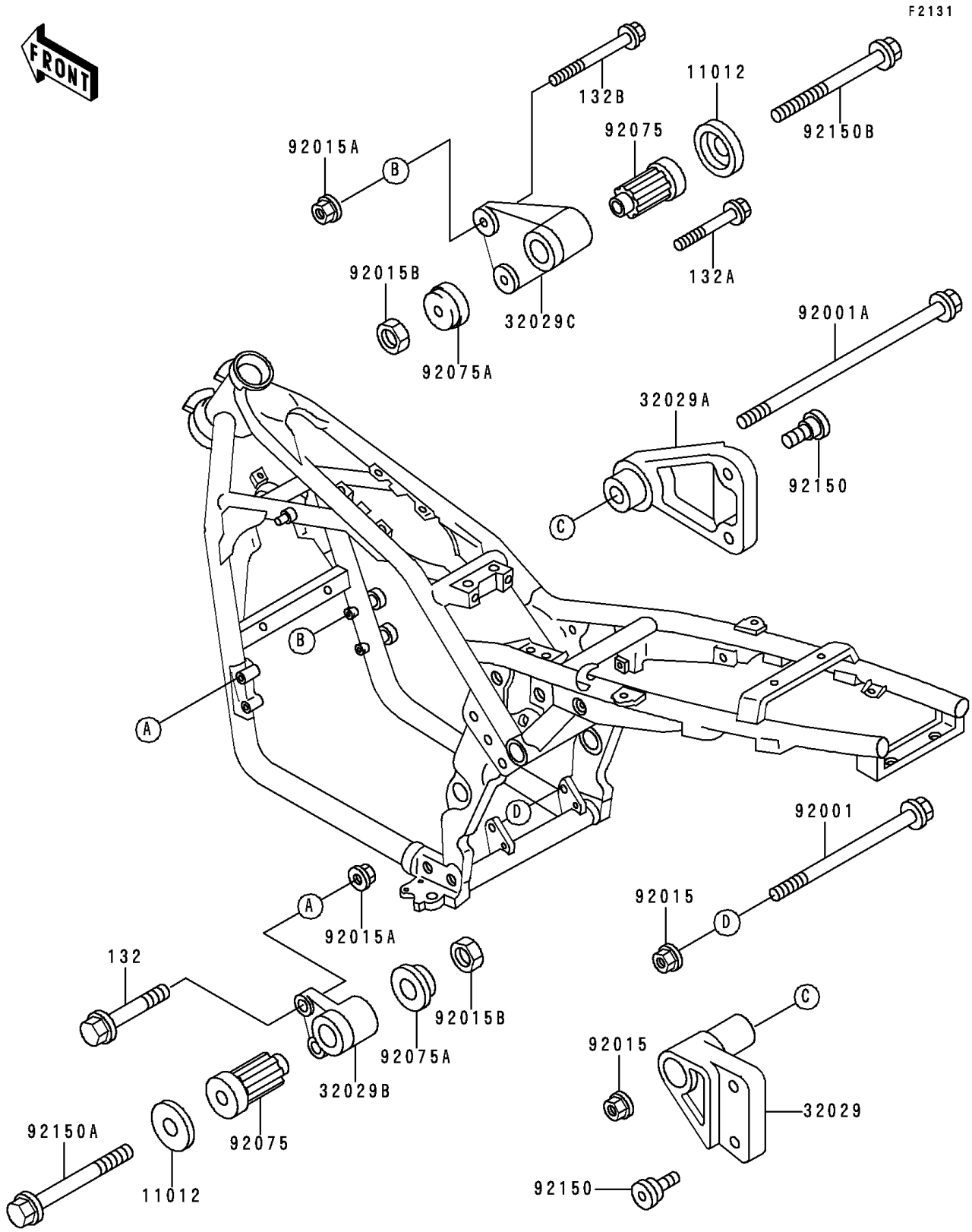

© 2026 Kawasaki Motors Corp., U.S.A.

1991 Zephyr

PARTS LIST

Frame Fitting

ITEM NAME	PART NUMBER	QUANTITY
BOLT-FLANGED-SMALL,8X60 (Ref # 132)	132J0860	2
BOLT-FLANGED-SMALL (Ref # 132A)	132J0875	1
BOLT-FLANGED-SMALL (Ref # 132B)	132J0890	1
CAP,ENGINE BRACKET (Ref # 11012)	11012-1228	2
BRACKET-ENGINE,RR,LH,C.GRAY (Ref # 32029)	32029-1676-EZ	1
BRACKET-ENGINE,RR,RH,C.GRAY (Ref # 32029A)	32029-1677-EZ	1
BRACKET-ENGINE,FR,LH,C.GRAY (Ref # 32029B)	32029-1679-EZ	1
BRACKET-ENGINE,FR,RH,C.GRAY (Ref # 32029C)	32029-1680-EZ	1
BOLT,FLANGED,10X180 (Ref # 92001)	92001-1621	1
BOLT,FLANGED,10X240 (Ref # 92001A)	92001-1812	1
NUT,FLANGED,10MM (Ref # 92015)	92015-1180	2
NUT,FLANGED,8MM,BLACK (Ref # 92015A)	92015-1183	4
NUT,LOCK,10MM,BLACK (Ref # 92015B)	92015-1188	2
DAMPER,ENGINE MOUNT,MAIN (Ref # 92075)	92075-1377	2
DAMPER,ENGINE BRACKET (Ref # 92075A)	92075-1462	2
BOLT,SOCKET,8X20 (Ref # 92150)	92150-1148	4
BOLT,FLANGED,10X110 (Ref # 92150A)	92150-1317	1
BOLT,FLANGED,10X125 (Ref # 92150B)	92150-1318	1

© 2026 Kawasaki Motors Corp., U.S.A.