1991 Zephyr

PARTS DIAGRAM

Breather Body/Oil Pan

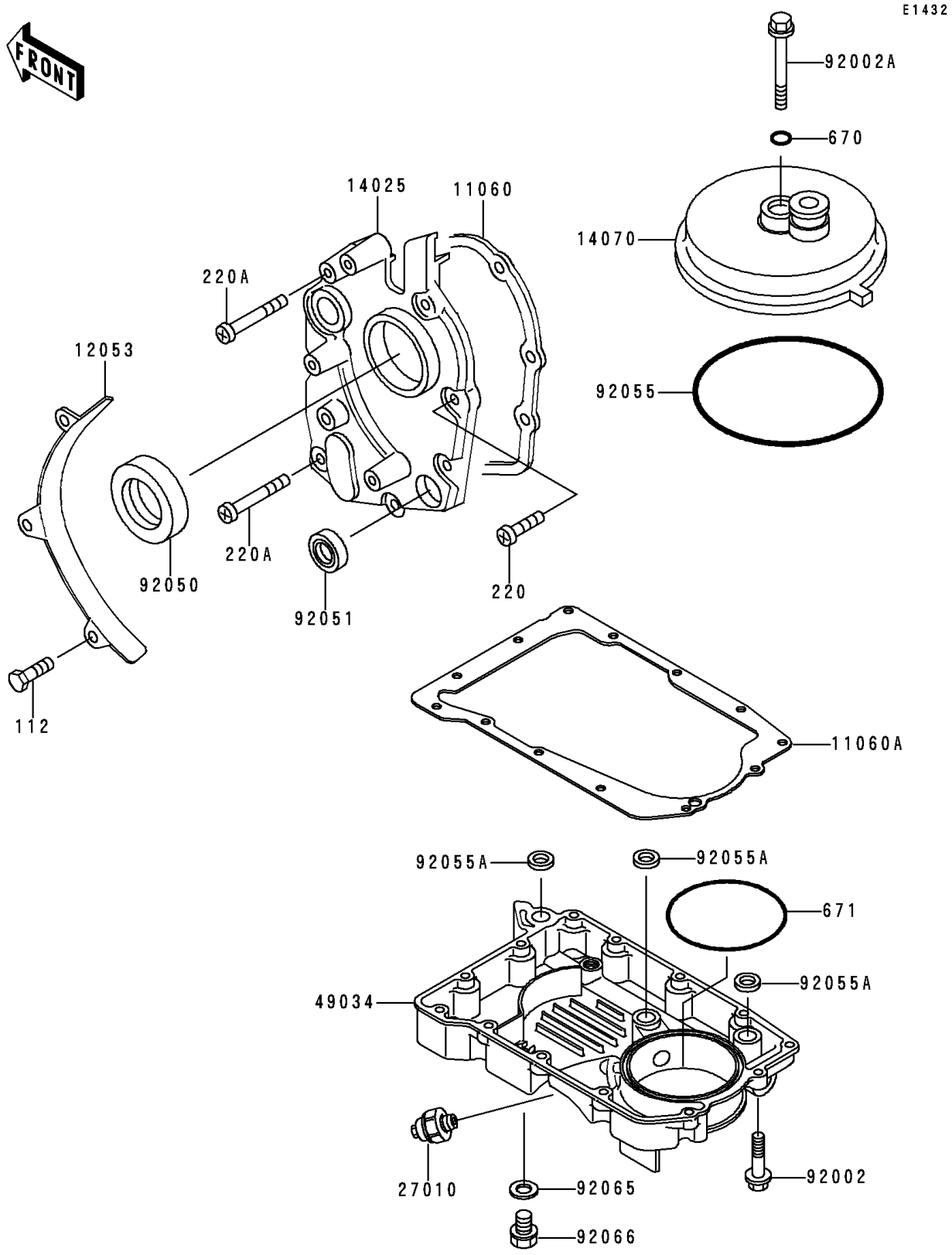

© 2026 Kawasaki Motors Corp., U.S.A.

1991 Zephyr

PARTS LIST

Breather Body/Oil Pan

ITEM NAME	PART NUMBER	QUANTITY
BOLT-UPSET (Ref # 112)	112B0614	3
SCREW-PAN-CROS,6X20,WHITE (Ref # 220)	220B0620	5
SCREW-PAN-CROS,6X40 (Ref # 220A)	220B0640	2
O RING,8MM (Ref # 670)	670B1508	1
O RING,90MM (Ref # 671)	671B2590	1
GASKET,TRANSMISSION COVER (Ref # 11060)	11060-1056	1
GASKET,OIL PAN (Ref # 11060A)	11060-1057	1
GUIDE-CHAIN (Ref # 12053)	12053-1006	1
COVER,TRANSMISSION (Ref # 14025)	14025-1700	1
BODY-BREATHER,BLACK (Ref # 14070)	14070-1010	1
SWITCH,OIL PRESSURE (Ref # 27010)	27010-1155	1
PAN-OIL (Ref # 49034)	49034-1084	1
BOLT,6X25 (Ref # 92002)	92002-1089	13
BOLT,8X72 (Ref # 92002A)	92002-1329	1
SEAL-OIL,SC325210 (Ref # 92050)	92050-024	1
SEAL-OIL,TB13225.5 (Ref # 92051)	92051-005	1
RING-O,91.6X3.4 (Ref # 92055)	92055-052	1
RING-O,19.5MM (Ref # 92055A)	92055-077	3
GASKET,12X22X2,DRAIN PLUG (Ref # 92065)	92065-097	1
PLUG,OIL DRAIN,12X15 (Ref # 92066)	92066-1174	1

© 2026 Kawasaki Motors Corp., U.S.A.