# 1991 Zephyr

## PARTS DIAGRAM

### Change Drum/Shift Fork

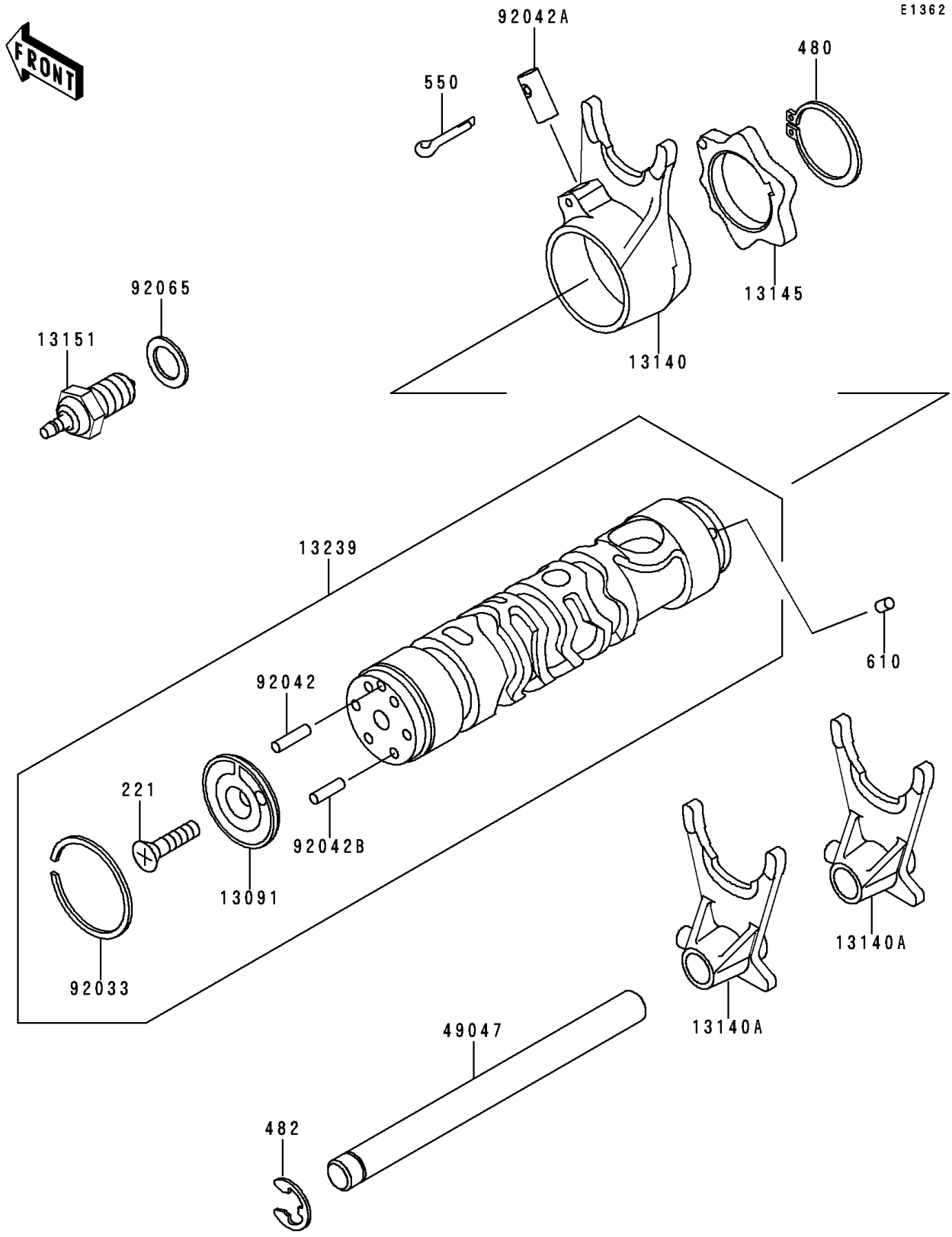


© 2026 Kawasaki Motors Corp., U.S.A.

# 1991 Zephyr

## PARTS LIST

### Change Drum/Shift Fork

| ITEM NAME | PART NUMBER | QUANTITY |
|---|---|---|
| SCREW-CSK-CROS,6X20 (Ref # 221) | 221B0620 | 1 |
| CIRCLIP-TYPE-C,30MM (Ref # 480) | 480J3000 | 1 |
| CIRCLIP-TYPE-E,10MM (Ref # 482) | 482J0100 | 1 |
| PIN-COTTER,3.0X20 (Ref # 550) | 550D3020 | 1 |
| ROLLER,4X6 (Ref # 610) | 610A0406 | 1 |
| HOLDER,CHANGE DRUM PIN (Ref # 13091) | 13091-1104 | 1 |
| FORK-SHIFT,DRIVE (Ref # 13140) | 13140-1016 | 1 |
| FORK-SHIFT,OUTPUT (Ref # 13140A) | 13140-1062 | 2 |
| CAM-CHANGE DRUM (Ref # 13145) | 13145-1058 | 1 |
| SWITCH-COMP,NEUTRAL (Ref # 13151) | 13151-1007 | 1 |
| DRUM-ASSY-CHANGE (Ref # 13239) | 13239-1119 | 1 |
| ROD-SHIFT (Ref # 49047) | 49047-1069 | 1 |
| RING-SNAP,37MM (Ref # 92033) | 92033-035 | 1 |
| PIN,DOWEL,4X15.8 (Ref # 92042) | 92042-014 | 1 |
| PIN,DOWEL,8X18 (Ref # 92042A) | 92042-021 | 1 |
| PIN,DOWEL,4X13.8 (Ref # 92042B) | 92042-030 | 5 |
| GASKET,10.5X16X1,DRAIN PLUG (Ref # 92065) | 92065-058 | 1 |

© 2026 Kawasaki Motors Corp., U.S.A.