2004 ZRX1200R

PARTS DIAGRAM

Seat

F2510

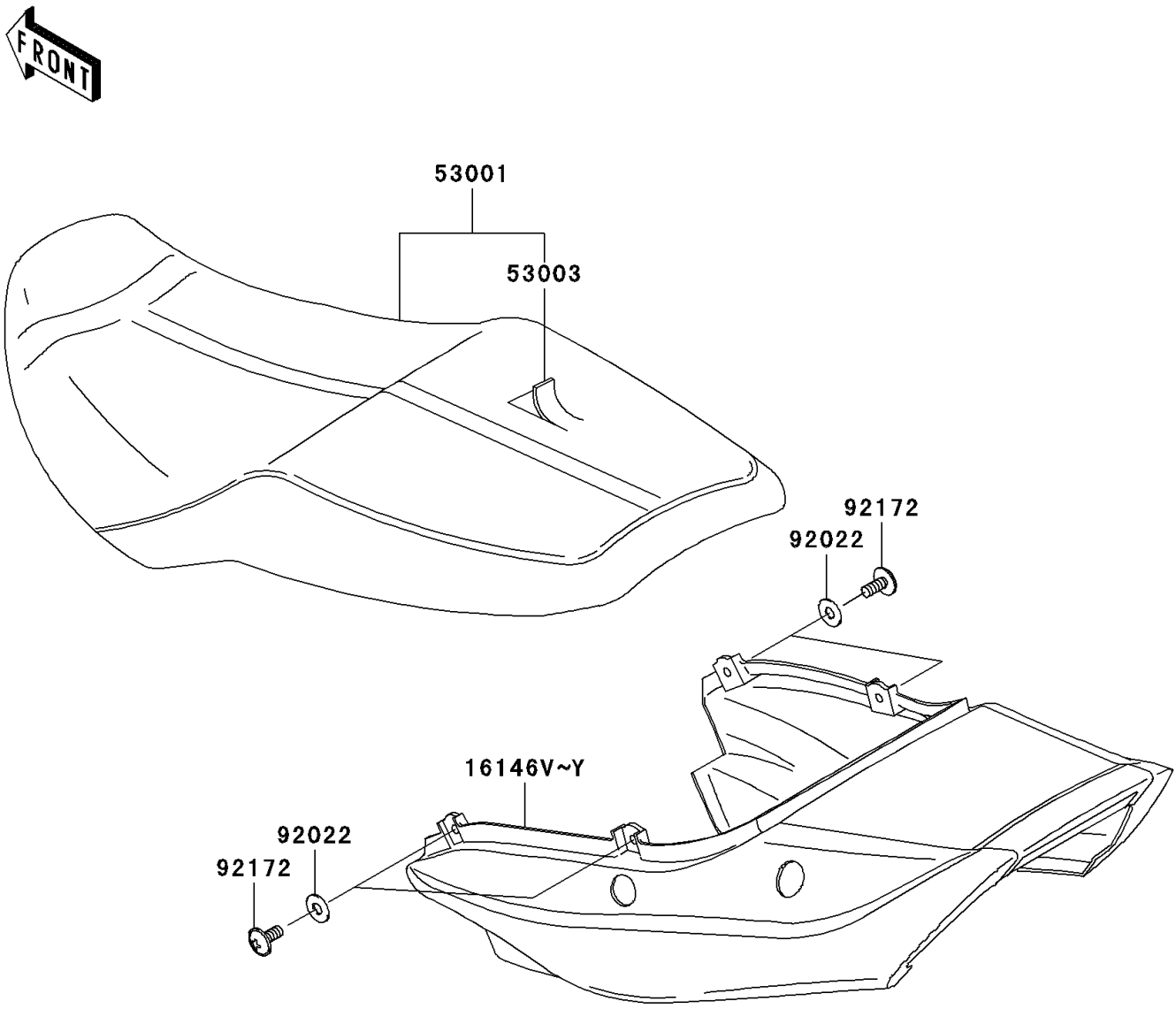

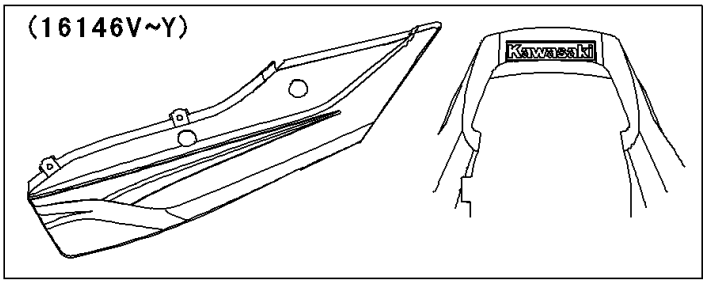

WD

('04)	(16146V)	Green
	(16146W)	Silver
	(16146X)	Red
('05)	(16146Y)	Green

© 2026 Kawasaki Motors Corp., U.S.A.

2004 ZRX1200R

PARTS LIST

Seat

ITEM NAME	PART NUMBER	QUANTITY
COVER-ASSY,SEAT,P.RED (Ref # 16146X)	16146-5108-234	1
SEAT-ASSY,DUAL,BLACK (Ref # 53001)	53001-1957-MA	1
LEATHER,SEAT,BLACK (Ref # 53003)	53003-1490-MA	1
WASHER,6.5X16X1 (Ref # 92022)	92022-1143	4
SCREW,6X14 (Ref # 92172)	92172-0004	4
COVER-ASSY,SEAT,C.L.GREEN (Ref # 16146V)	16146-5106-8N	1
COVER-ASSY,SEAT,G.SILVER (Ref # 16146W)	16146-5107-474	1

© 2026 Kawasaki Motors Corp., U.S.A.