2004 ZRX1200R

PARTS DIAGRAM

Suspension/Shock Absorber

F2151

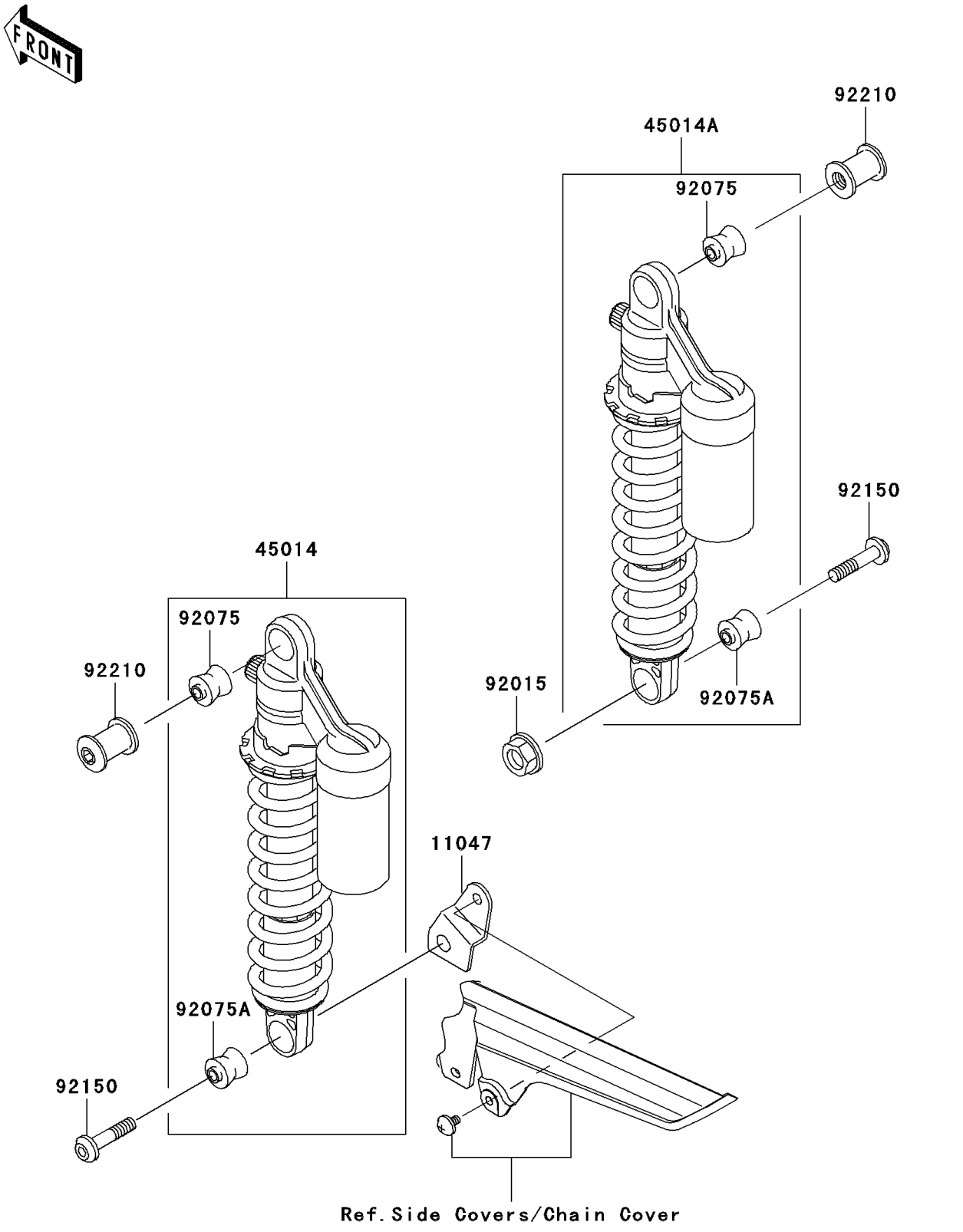

© 2026 Kawasaki Motors Corp., U.S.A.

2004 ZRX1200R

PARTS LIST

Suspension/Shock Absorber

ITEM NAME	PART NUMBER	QUANTITY
BRACKET,CHAIN CASE (Ref # 11047)	11047-1239	1
SHOCKABSORBER,LH,BARREL (Ref # 45014)	45014-0062-2H	1
SHOCKABSORBER,RH,BARREL (Ref # 45014A)	45014-0063-2H	1
NUT,FLANGED,10MM (Ref # 92015)	92015-1335	1
DAMPER,SHOCKABSORBER (Ref # 92075)	92075-1141	2
DAMPER,SHOCKABSORBER (Ref # 92075A)	92075-1586	2
BOLT,SOCKET,10X45 (Ref # 92150)	92150-1736	2
NUT,HOOK (Ref # 92210)	92210-1274	2

© 2026 Kawasaki Motors Corp., U.S.A.