2004 ZRX1200R

PARTS DIAGRAM

Swingarm

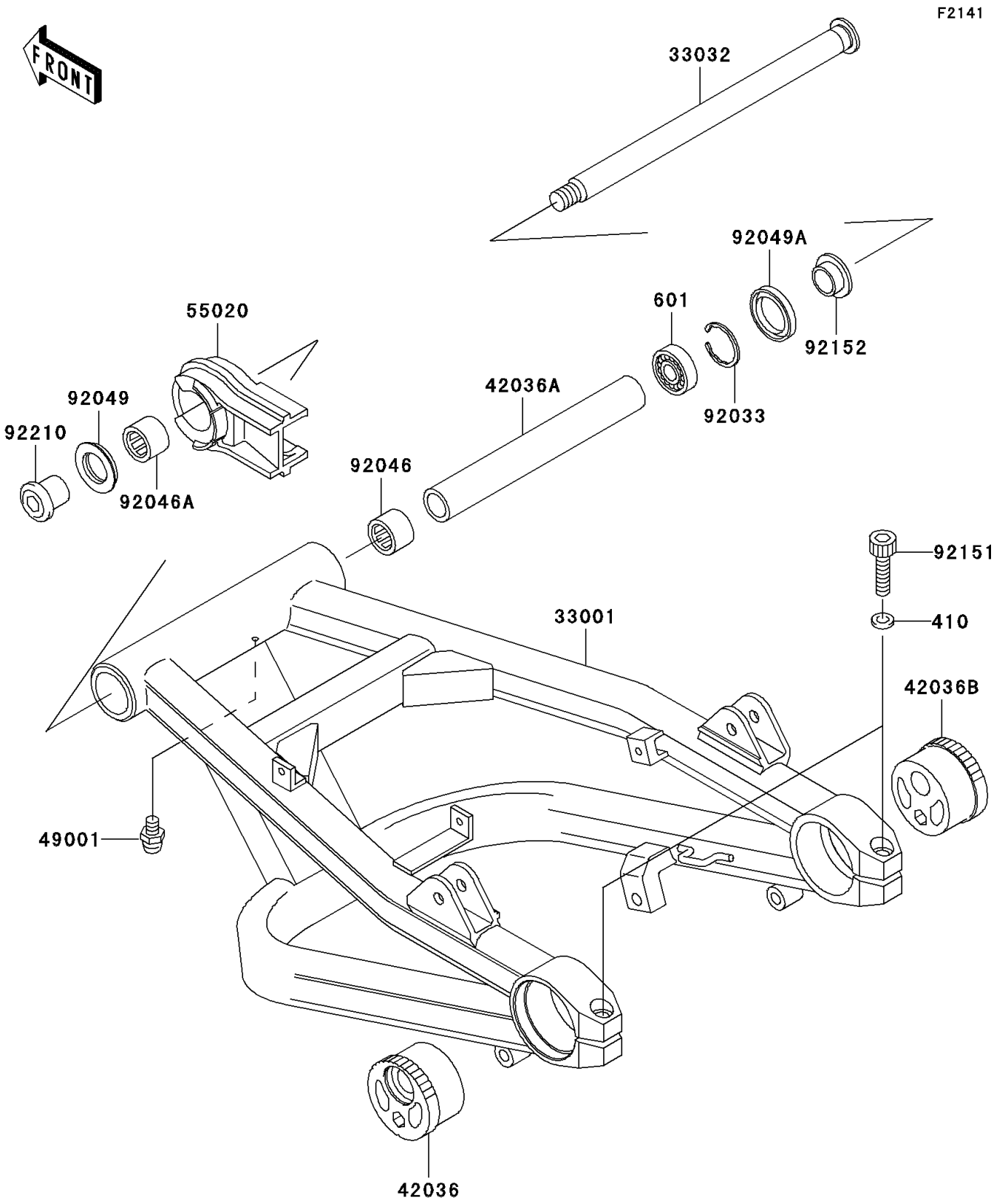

© 2026 Kawasaki Motors Corp., U.S.A.

2004 ZRX1200R

PARTS LIST

Swingarm

ITEM NAME	PART NUMBER	QUANTITY
W-PLAIN-S (Ref # 410)	410E1000	2
BEARING-BALL,#6004 (Ref # 601)	601A6004	1
ARM-COMP-SWING (Ref # 33001)	33001-0026	1
SHAFT-SWING ARM (Ref # 33032)	33032-1182	1
SLEEVE,REAR AXLE,LH,A.GOLD (Ref # 42036)	42036-1153-ES	1
SLEEVE,SWING ARM,L=213.5 (Ref # 42036A)	42036-1259	1
SLEEVE,REAR AXLE,RH,A.GOLD (Ref # 42036B)	42036-1265-ES	1
NIPPLE-GREASE (Ref # 49001)	49001-0001	1
GUARD,CHAIN (Ref # 55020)	55020-1742	1
RING-SNAP,42MM (Ref # 92033)	92033-1041	1
BEARING-NEEDLE,BM2817 (Ref # 92046)	92046-1111	1
BEARING-NEEDLE,BM2824 (Ref # 92046A)	92046-1202	1
SEAL-OIL (Ref # 92049)	92049-1181	1
SEAL-OIL,MHSA25 42 6 (Ref # 92049A)	92049-1314	1
BOLT,SOCKET,10X40 (Ref # 92151)	92151-1899	2
COLLAR,SWING ARM,L=12.5 (Ref # 92152)	92152-1234	1
NUT,PIVOT,16MM (Ref # 92210)	92210-1077	1

© 2026 Kawasaki Motors Corp., U.S.A.