2017 MULE™ 4010 TRANS4x4® CAMO

PARTS DIAGRAM

Oil Pump/Oil Filter

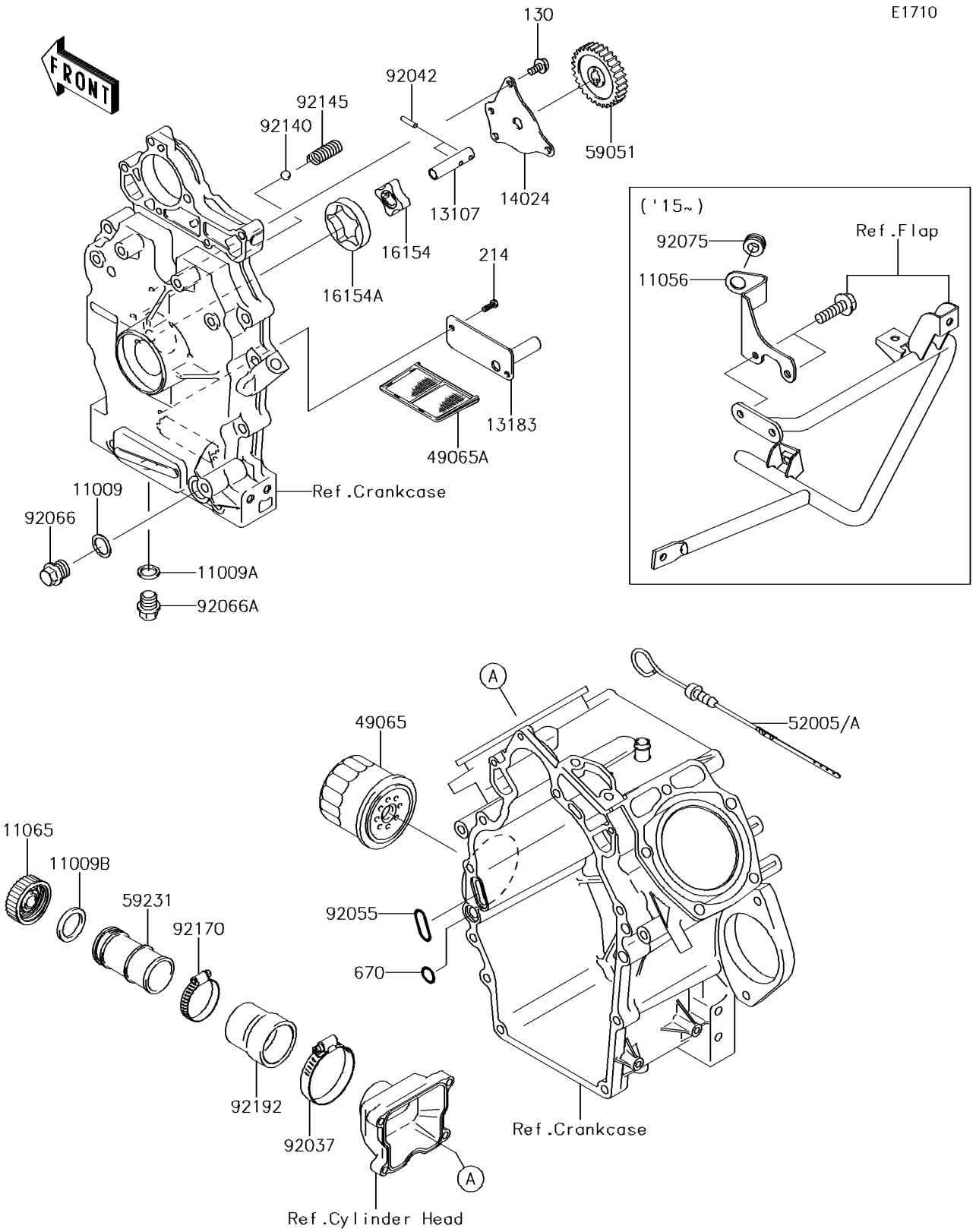

© 2026 Kawasaki Motors Corp., U.S.A.

2017 MULE™ 4010 TRANS4x4® CAMO

Kawasaki
Let the Good Times Roll®

PARTS LIST

Oil Pump/Oil Filter

ITEM NAME	PART NUMBER	QUANTITY
GASKET,16.2X22X1 (Ref # 11009)	11009-1467	1
GASKET (Ref # 11009A)	11009-2175	1
GASKET,OIL GAUGE (Ref # 11009B)	11009-2346	1
BRACKET,OIL PIPE (Ref # 11056)	11056-4081	1
CAP (Ref # 11065)	11065-1167	1
SHAFT,OIL PUMP (Ref # 13107)	13107-2296	1
PLATE (Ref # 13183)	13183-2419	1
COVER,OIL PUMP (Ref # 14024)	14024-2113	1
ROTOR-PUMP,IN (Ref # 16154)	16154-2053	1
ROTOR-PUMP,OUT (Ref # 16154A)	16154-2054	1
FILTER-OIL (Ref # 49065)	49065-2071	1
FILTER-OIL (Ref # 49065A)	49065-2072	1
GAUGE (Ref # 52005)	52005-0747	1
GEAR-SPUR (Ref # 59051)	59051-2114	1
FILLER (Ref # 59231)	59231-7501	1
CLAMP (Ref # 92037)	92037-506	1
PIN,DOWEL,4X15.8 (Ref # 92042)	92042-014	2
RING-O (Ref # 92055)	92055-2086	1
PLUG,16X11.5 (Ref # 92066)	92066-2251	1
PLUG,14X12 (Ref # 92066A)	92066-2253	1
DAMPER (Ref # 92075)	92075-1409	1
BALL,STEEL,13/32 (Ref # 92140)	92140-7003	1
SPRING (Ref # 92145)	92145-2132	1
CLAMP (Ref # 92170)	92170-1036	1
TUBE (Ref # 92192)	92192-7502	1
BOLT-FLANGED,6X12 (Ref # 130)	130BA0612	3
SCREW-PAN+-,5X12 (Ref # 214)	214AA0512	2
O RING,11MM (Ref # 670)	670B2011	1

© 2026 Kawasaki Motors Corp., U.S.A.