2004 ZRX1200R

PARTS DIAGRAM

Engine Mount

F2122

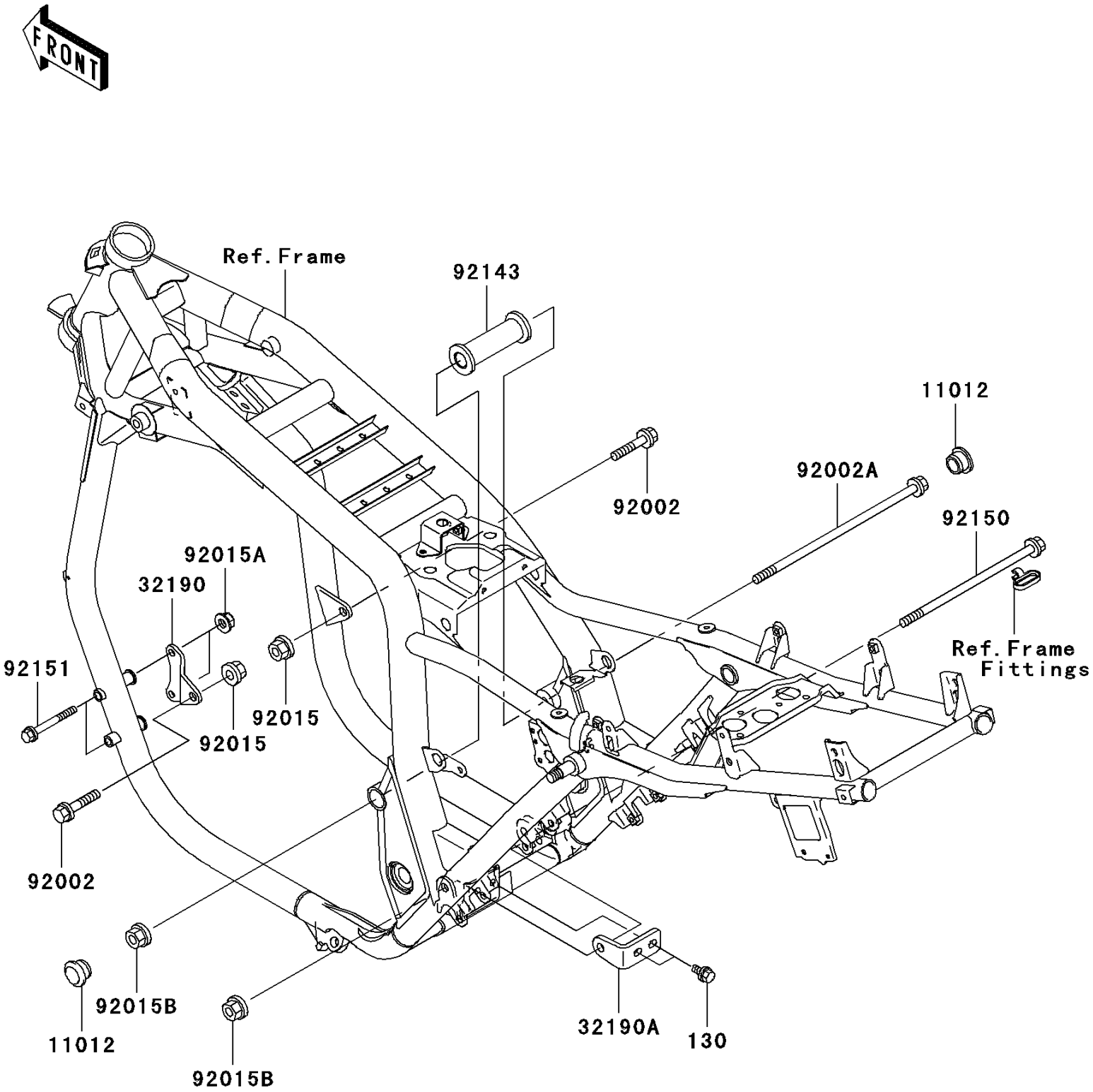

© 2026 Kawasaki Motors Corp., U.S.A.

2004 ZRX1200R

PARTS LIST

Engine Mount

ITEM NAME	PART NUMBER	QUANTITY
BOLT-FLANGED,8X16,BLACK (Ref # 130)	130J0816	2
CAP (Ref # 11012)	11012-1896	2
BRACKET-ENGINE (Ref # 32190)	32190-1066	1
BRACKET-ENGINE (Ref # 32190A)	32190-1230	1
BOLT,FLANGED,10X50 (Ref # 92002)	92002-1314	2
BOLT,FLANGED,10X265 (Ref # 92002A)	92002-1722	1
NUT,LOCK,10MM,BLACK (Ref # 92015)	92015-1189	2
NUT,LOCK,FLANGED,8MM (Ref # 92015A)	92015-1397	2
NUT,LOCK,10MM (Ref # 92015B)	92015-1522	2
COLLAR,L=61.5 (Ref # 92143)	92143-1916	1
BOLT,FLANGED,10X215 (Ref # 92150)	92150-1142	1
BOLT,FLANGED,8X69 (Ref # 92151)	92151-1995	2

© 2026 Kawasaki Motors Corp., U.S.A.