2004 ZRX1200R

PARTS DIAGRAM

Ignition System

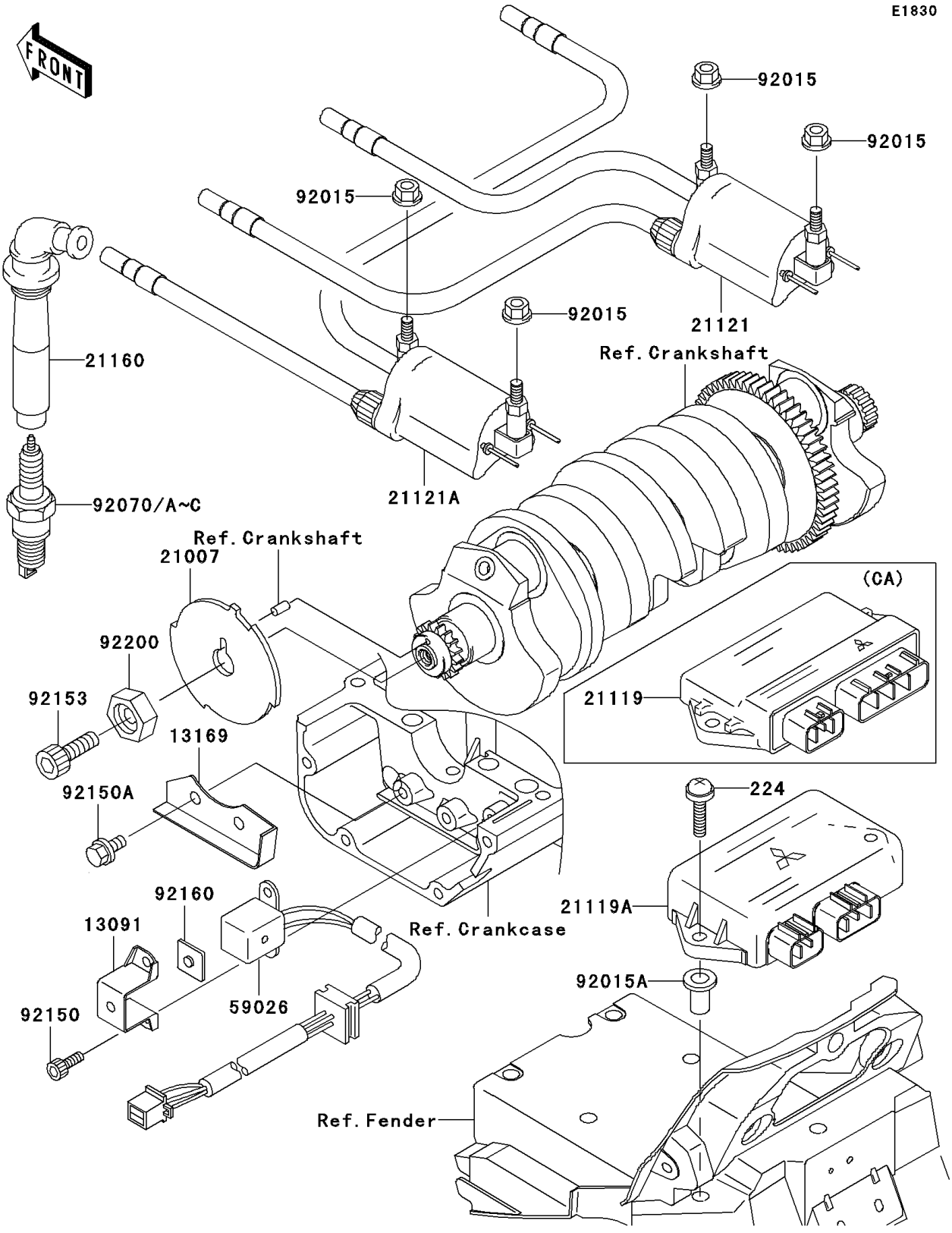

© 2026 Kawasaki Motors Corp., U.S.A.

2004 ZRX1200R

PARTS LIST

Ignition System

ITEM NAME	PART NUMBER	QUANTITY
SCREW-PAN-WP-CROS (Ref # 224)	224C0625	2
HOLDER (Ref # 13091)	13091-1562	1
PLATE,CHAIN GUIDE (Ref # 13169)	13169-1748	1
ROTOR,PULSING (Ref # 21007)	21007-1277	1
COIL-IGNITION,#2&#3 (Ref # 21121)	21121-1268	1
COIL-IGNITION (Ref # 21121A)	21121-1300	1
CAP-ASSY-PLUG (Ref # 21160)	21160-1098	4
COIL-PULSING (Ref # 59026)	59026-1132	1
NUT,FLANGED,6MM (Ref # 92015)	92015-1193	4
NUT (Ref # 92015A)	92015-1700	2
PLUG-SPARK,U27ETR(ND) (Ref # 92070)		4
PLUG-SPARK,U24ETR(ND) (Ref # 92070A)		4
PLUG-SPARK,CR9EK(NGK) (Ref # 92070B)	92070-1264	4
PLUG-SPARK,CR8EK(NGK) (Ref # 92070C)	92070-1265	4
BOLT,SOCKET,5X14 (Ref # 92150)	92150-1180	2
BOLT,6X12 (Ref # 92150A)	92150-1841	2
BOLT,M8X25 (Ref # 92153)	92153-1191	1
DAMPER (Ref # 92160)	92160-1091	1
WASHER,ROTOR (Ref # 92200)	92200-1173	1
IGNITER (Ref # 21119)	21119-0029	1
IGNITER (Ref # 21119A)	21119-1585	1

© 2026 Kawasaki Motors Corp., U.S.A.