2014 MULE™ 4000

PARTS DIAGRAM

Ignition Switch

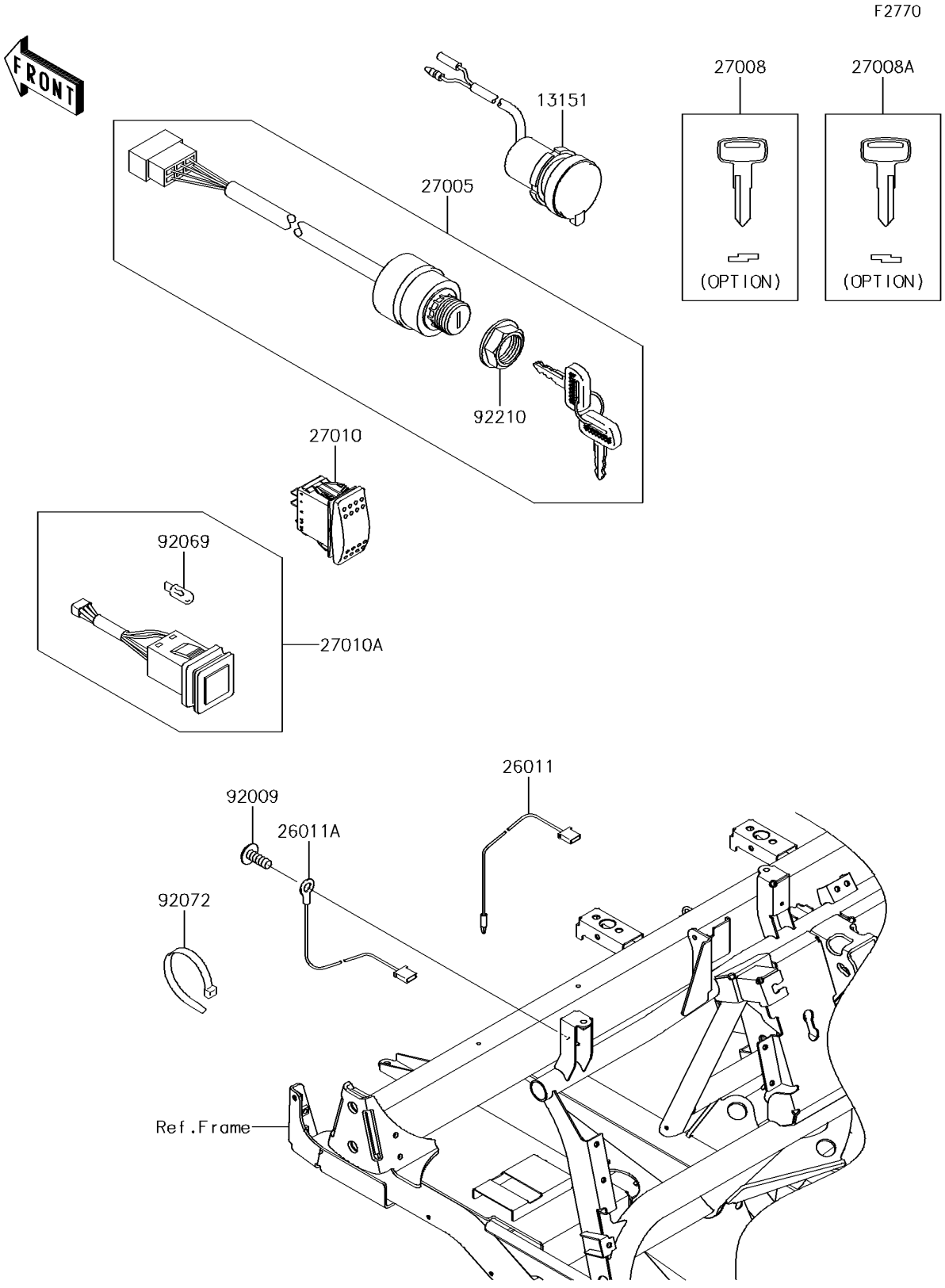

© 2026 Kawasaki Motors Corp., U.S.A.

2014 MULE™ 4000

PARTS LIST

Ignition Switch

ITEM NAME	PART NUMBER	QUANTITY
SWITCH-COMP,D.C.TERMINAL (Ref # 13151)	13151-0003	1
WIRE-LEAD,360MM (Ref # 26011)	26011-0796	1
WIRE-LEAD,320MM (Ref # 26011A)	26011-0797	1
SWITCH-ASSY-IGNITION (Ref # 27005)	27005-0011	1
KEY-LOCK,BLANK (Ref # 27008)	27008-1153	1
KEY-LOCK,BLANK (Ref # 27008A)	27008-1157	1
SWITCH,HORN (Ref # 27010)	27010-0734	1
SWITCH,HEAD LAMP (Ref # 27010A)	27010-0814	1
SCREW,TAPPING,6X16 (Ref # 92009)	92009-1166	1
BULB,12V 1.7W (Ref # 92069)	92069-0083	1
BAND,L=188 (Ref # 92072)	92072-1239	1
NUT,IGNITION SWITCH (Ref # 92210)	92210-1264	1

© 2026 Kawasaki Motors Corp., U.S.A.