# 2017 MULE™ 4000

## PARTS DIAGRAM

### Headlight(s)

F2710

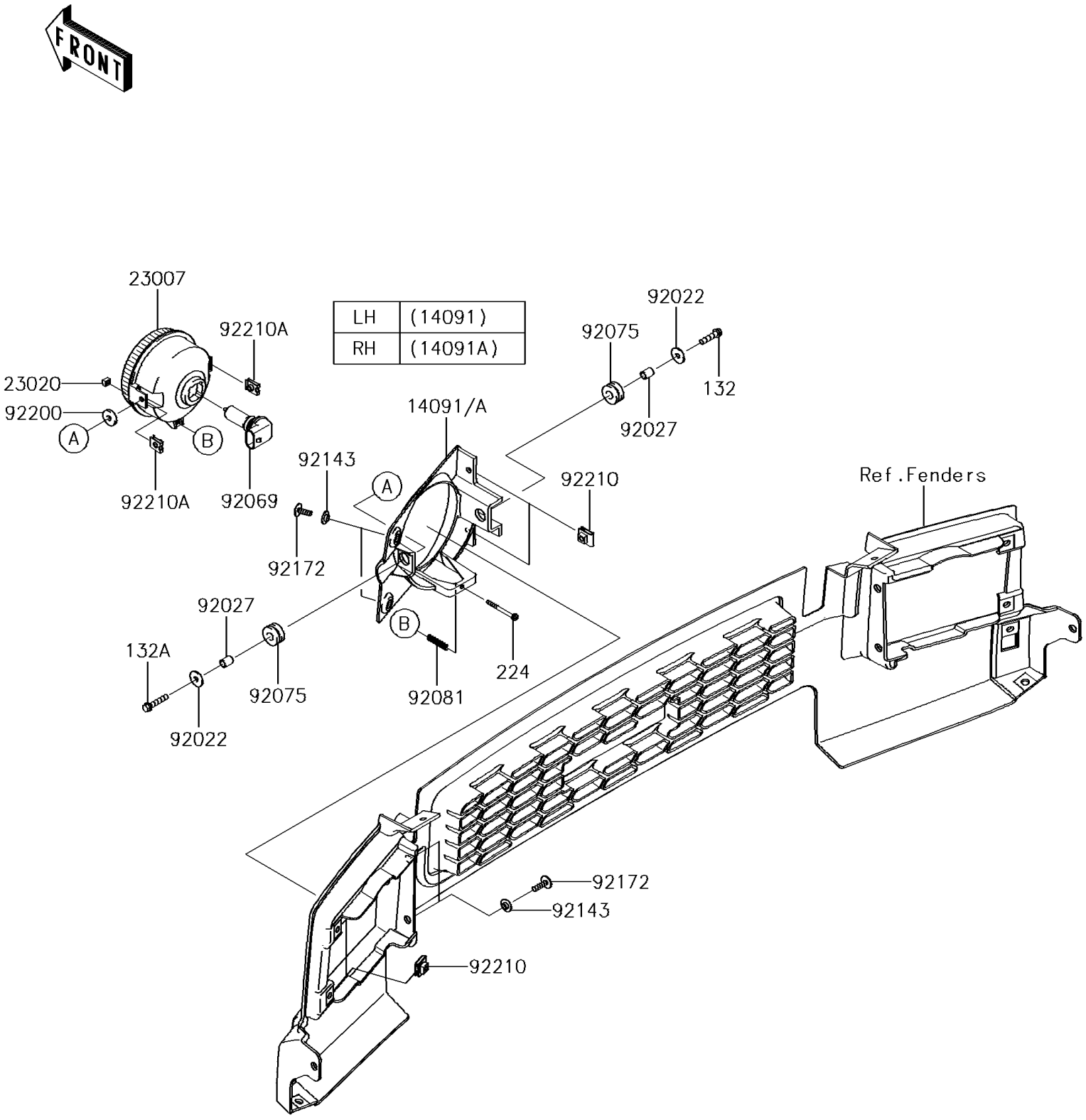


© 2026 Kawasaki Motors Corp., U.S.A.

# 2017 MULE™ 4000

## PARTS LIST

### Headlight(s)

| ITEM NAME | PART NUMBER | QUANTITY |
|---|---|---|
| COVER,HEAD LAMP,LH (Ref # 14091) | 14091-0827 | 1 |
| COVER,HEAD LAMP,RH (Ref # 14091A) | 14091-0828 | 1 |
| LENS-COMP,HEAD LAMP (Ref # 23007) | 23007-0096 | 2 |
| NUT,4MM,FOCUS ADJUST (Ref # 23020) | 23020-018 | 2 |
| WASHER,6.5X20X1.6 (Ref # 92022) | 92022-125 | 4 |
| COLLAR,6.8X10X12 (Ref # 92027) | 92027-162 | 4 |
| BULB,12V 35/35W (Ref # 92069) | 92069-0019 | 2 |
| DAMPER,10X24X12 (Ref # 92075) | 92075-1690 | 4 |
| SPRING,FOCUS ADJUST (Ref # 92081) | 92081-1896 | 2 |
| COLLAR (Ref # 92143) | 92143-1087 | 8 |
| SCREW,TAPPING,6X20 (Ref # 92172) | 92172-0488 | 8 |
| WASHER,6.5X20X3.2 (Ref # 92200) | 92200-0359 | 2 |
| NUT,LEAF SPRING,6MM (Ref # 92210) | 92210-0624 | 8 |
| NUT (Ref # 92210A) | 92210-1125 | 4 |
| BOLT-FLANGED-SMALL,6X25 (Ref # 132) | 132BA0625 | 2 |
| BOLT-FLANGED-SMALL,6X30 (Ref # 132A) | 132BA0630 | 2 |
| SCREW-PAN-WP-CROS,4X45 (Ref # 224) | 224AA0445 | 2 |

© 2026 Kawasaki Motors Corp., U.S.A.