2014 MULE™ 4000

PARTS DIAGRAM

Fuel Injection

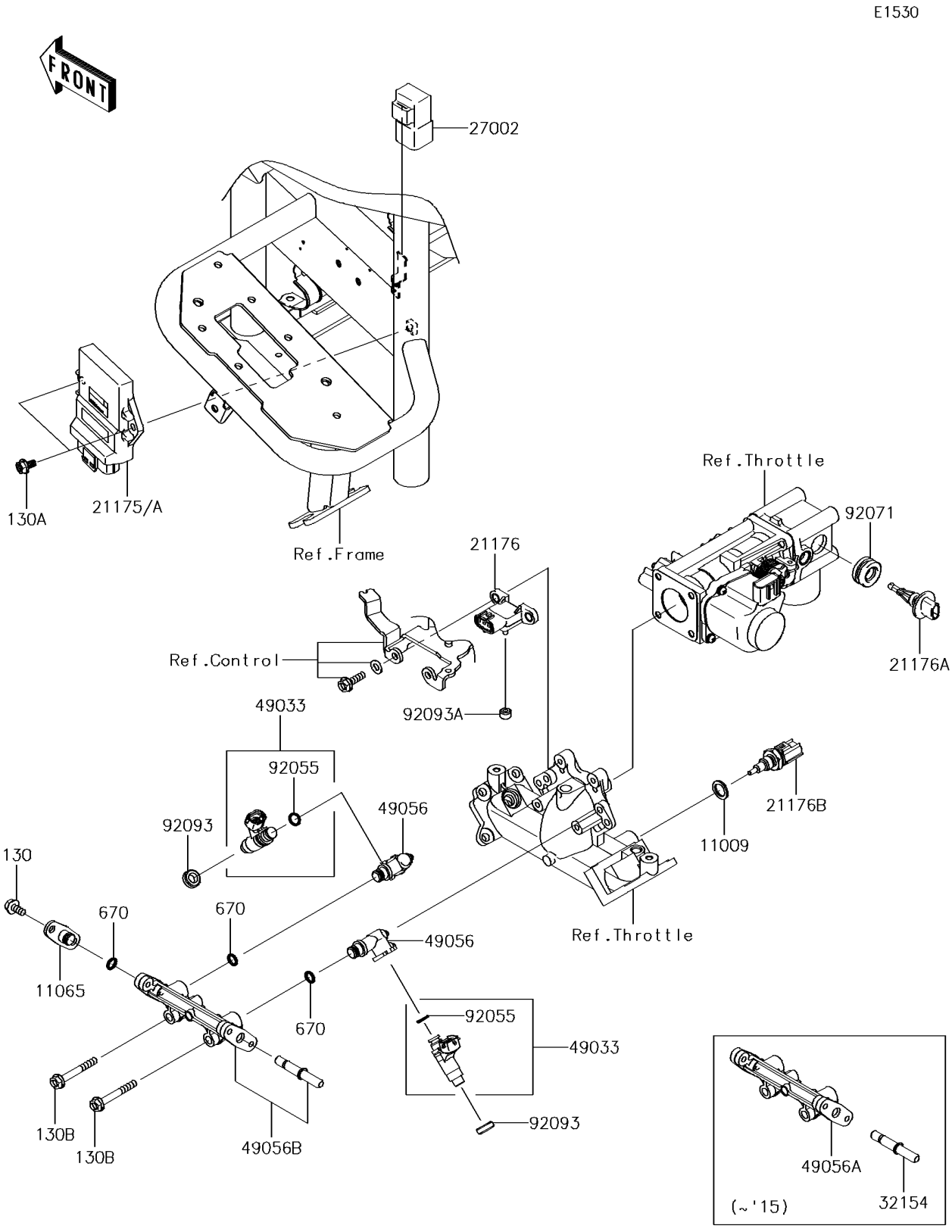

© 2026 Kawasaki Motors Corp., U.S.A.

2014 MULE™ 4000

PARTS LIST

Fuel Injection

ITEM NAME	PART NUMBER	QUANTITY
GASKET,12.5X18X1.5 (Ref # 11009)	11009-1376	1
CAP (Ref # 11065)	11065-2129	1
CONTROL UNIT-ELECTRONIC,F.I. (Ref # 21175)	21175-0332	1
SENSOR,PRESSURE (Ref # 21176)	21176-1095	1
SENSOR,AIR TEMP (Ref # 21176A)	21176-2106	1
SENSOR (Ref # 21176B)	21176-2111	1
RELAY-ASSY (Ref # 27002)	27002-1088	1
PIPE (Ref # 32154)	32154-2084	1
NOZZLE-INJECTION (Ref # 49033)	49033-2060	2
PIPE-INJECTION (Ref # 49056)	49056-2062	2
PIPE-INJECTION (Ref # 49056A)	49056-2064	1
RING-O,INJECTION NOZZLE (Ref # 92055)	92055-1622	2
GROMMET (Ref # 92071)	92071-2140	1
SEAL (Ref # 92093)	92093-2119	2
SEAL (Ref # 92093A)	92093-2127	1
BOLT-FLANGED,6X12 (Ref # 130)	130BA0612	2
BOLT-FLANGED,6X16 (Ref # 130A)	130BB0616	2
BOLT-FLANGED,6X45 (Ref # 130B)	130CA0645	2
O RING,8MM (Ref # 670)	670E1508	3

© 2026 Kawasaki Motors Corp., U.S.A.