2017 MULE™ 4010 4x4

PARTS DIAGRAM

Drive Shaft-Rear

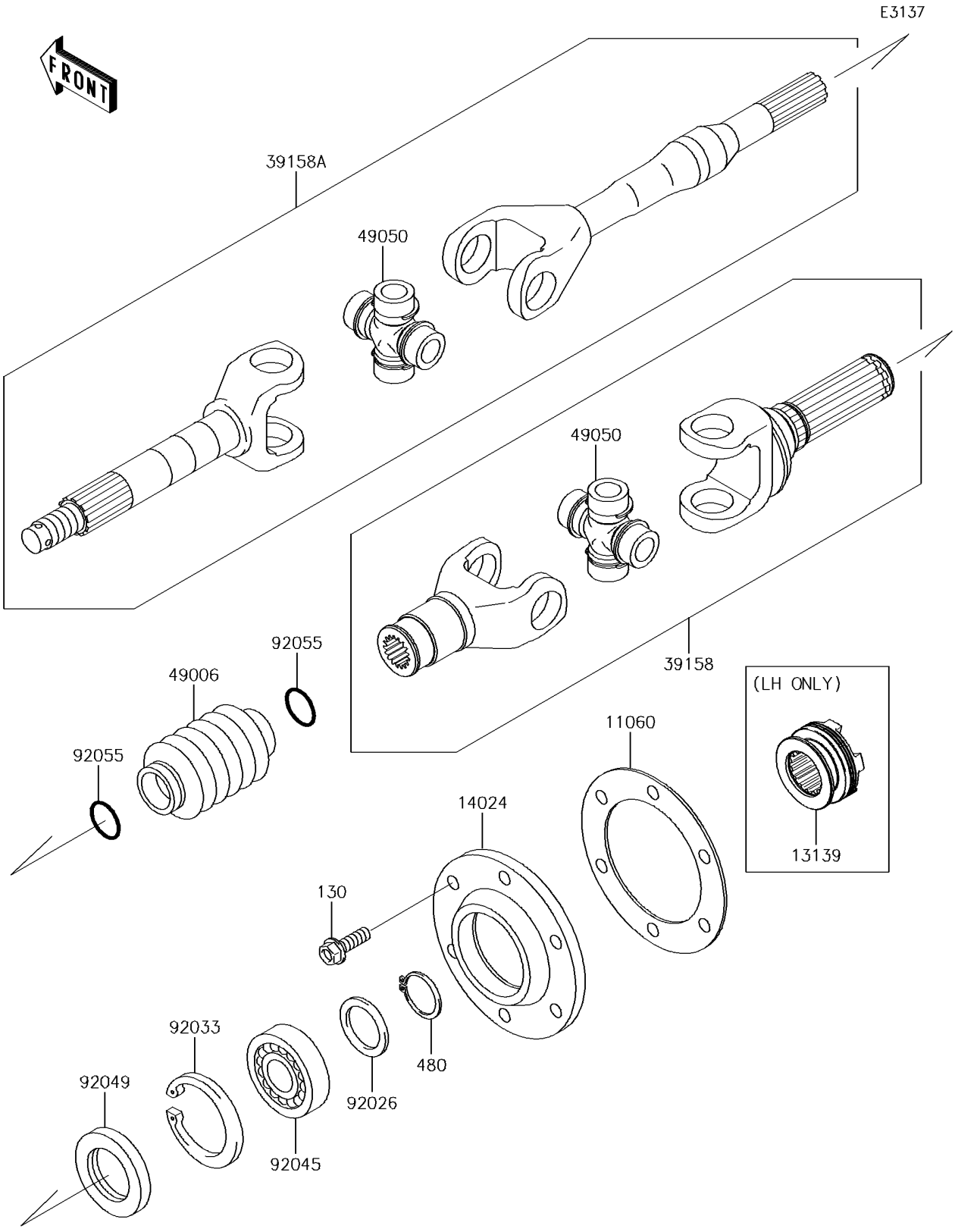

© 2026 Kawasaki Motors Corp., U.S.A.

2017 MULE™ 4010 4x4

PARTS LIST

Drive Shaft-Rear

ITEM NAME	PART NUMBER	QUANTITY
GASKET,DRIVESHAFT COVER (Ref # 11060)	11060-1251	2
SHIFTER (Ref # 13139)	13139-0009	1
COVER,DRIVESHAFT (Ref # 14024)	14024-1560	2
SHAFT-ASSY-DRIVE,INSIDE (Ref # 39158)	39158-1119	2
SHAFT-ASSY-DRIVE (Ref # 39158A)	39158-1120	2
BOOT,DRIVE SHAFT (Ref # 49006)	49006-1257	2
SPIDER (Ref # 49050)	49050-0034	4
SPACER,28.1X38X2.6 (Ref # 92026)	92026-1489	2
RING-SNAP,55MM (Ref # 92033)	92033-1274	2
BEARING-BALL,6006 (Ref # 92045)	92045-1208	2
SEAL-OIL,TC35X55X8 (Ref # 92049)	92049-1298	2
RING-O,19.5X3.0 (Ref # 92055)	92055-1451	4
BOLT-FLANGED,8X25 (Ref # 130)	130BA0825	12
CIRCLIP-TYPE-C,28MM (Ref # 480)	480J2800	2

© 2026 Kawasaki Motors Corp., U.S.A.