2017 MULE™ 4010 4x4

PARTS DIAGRAM

Water Pump

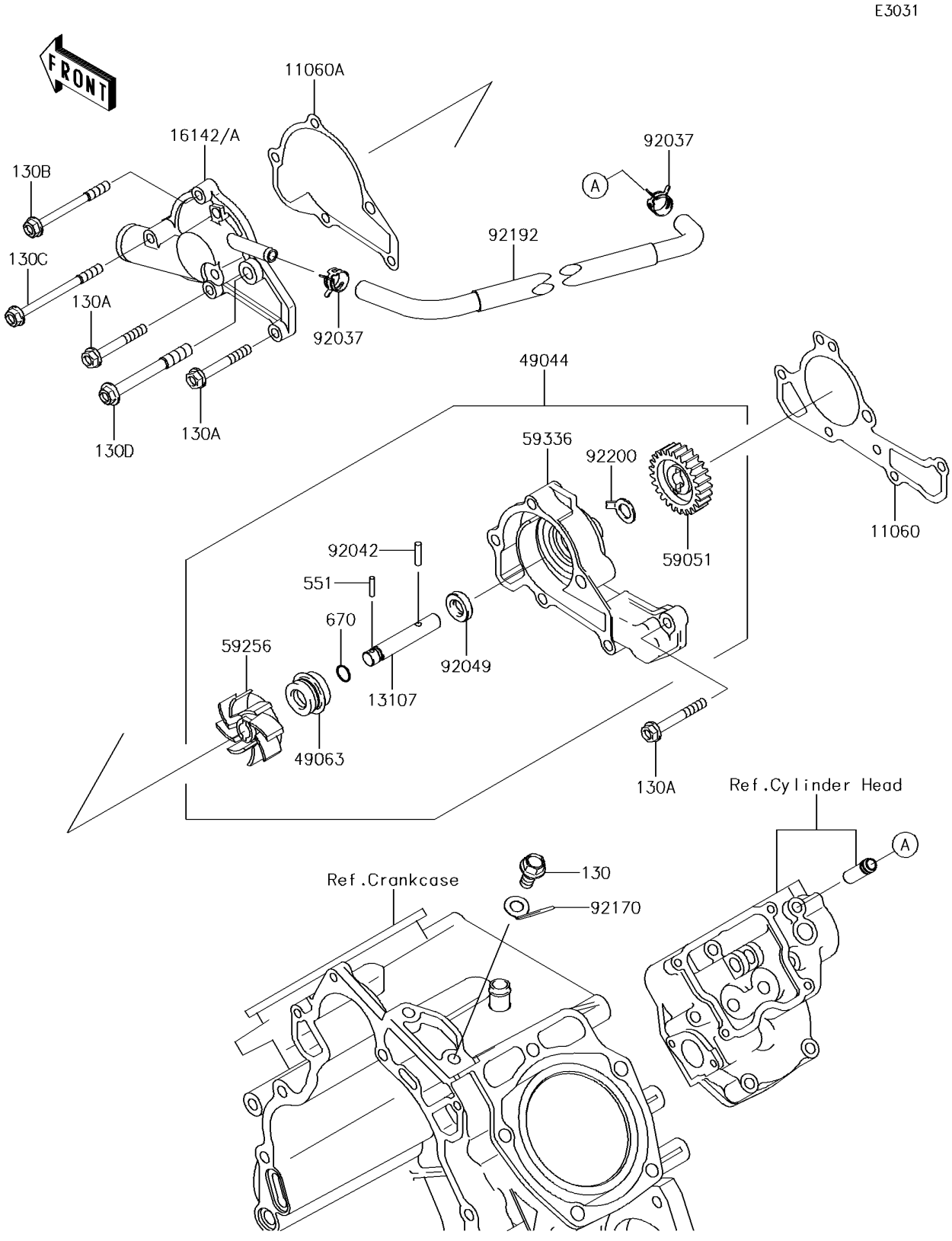

© 2026 Kawasaki Motors Corp., U.S.A.

2017 MULE™ 4010 4x4

PARTS LIST

Water Pump

ITEM NAME	PART NUMBER	QUANTITY
GASKET,PUMP CASE (Ref # 11060)	11060-2450	1
GASKET,PUMP COVER (Ref # 11060A)	11060-2451	1
SHAFT,IMPELLER (Ref # 13107)	13107-2097	1
COVER-PUMP (Ref # 16142)	16142-0714	1
COVER-PUMP (Ref # 16142A)	16142-0729	1
PUMP-WATER (Ref # 49044)	49044-2066	1
SEAL-MECHANICAL (Ref # 49063)	49063-1056	1
GEAR-SPUR (Ref # 59051)	59051-2113	1
IMPELLER (Ref # 59256)	59256-2057	1
CASE-PUMP (Ref # 59336)	59336-2052	1
CLAMP,HOSE CLIP (Ref # 92037)	92037-1181	2
PIN,DOWEL,4X15.8 (Ref # 92042)	92042-014	1
SEAL-OIL (Ref # 92049)	92049-2111	1
CLAMP (Ref # 92170)	92170-2060	1
TUBE (Ref # 92192)	92192-2169	1
WASHER (Ref # 92200)	92200-2044	1
BOLT-FLANGED,8X16 (Ref # 130)	130BA0816	1
BOLT-FLANGED,6X45 (Ref # 130A)	130CA0645	3
BOLT-FLANGED,6X65 (Ref # 130B)	130CA0665	1
BOLT-FLANGED,6X75 (Ref # 130C)	130CA0675	1
BOLT-FLANGED,8X70 (Ref # 130D)	130CA0870	1
PIN-DOWEL,3X14 (Ref # 551)	551A0314	1
O RING,7MM (Ref # 670)	670B1507	1

© 2026 Kawasaki Motors Corp., U.S.A.