# 2017 MULE™ 4010 4x4

## PARTS DIAGRAM

### Throttle

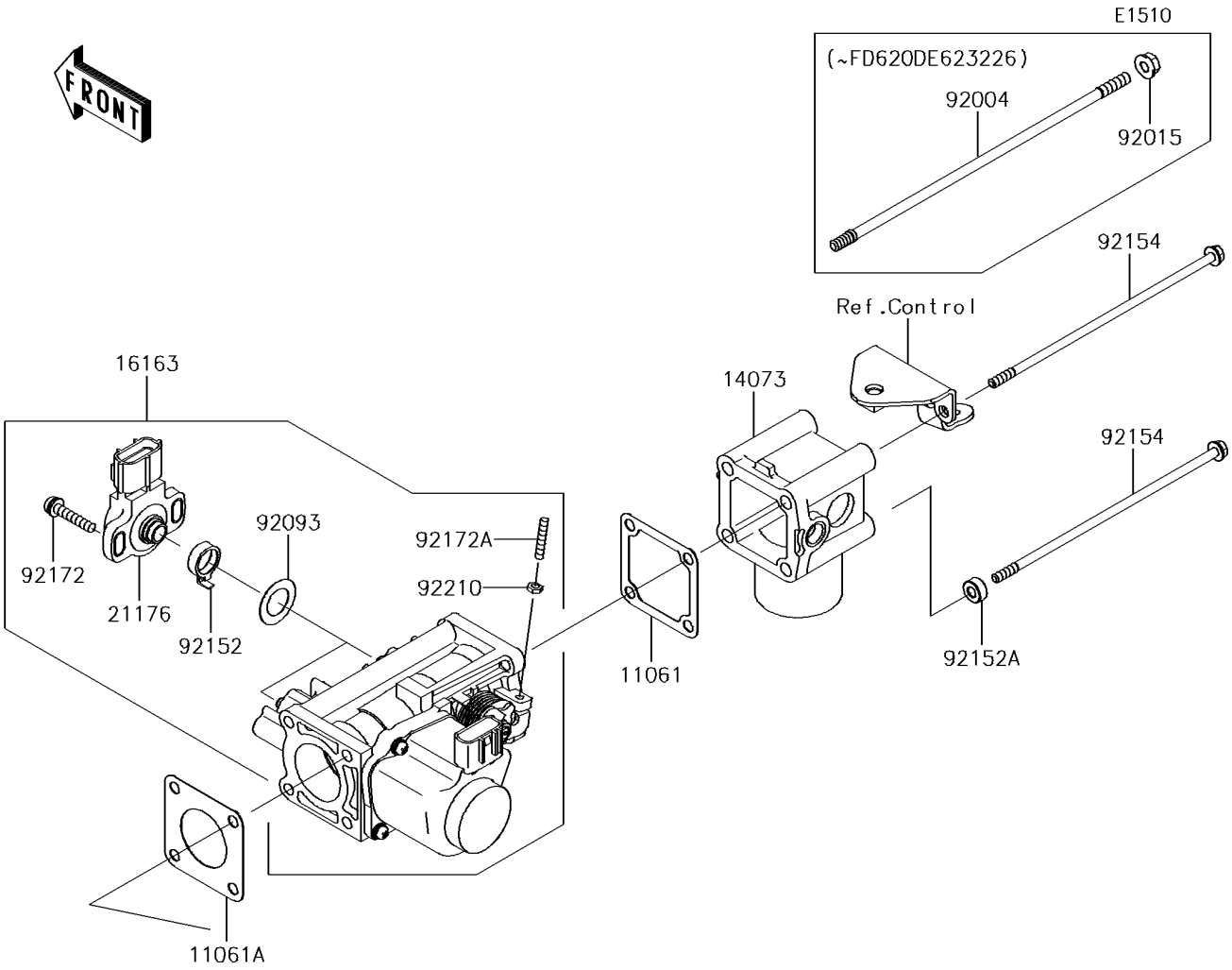


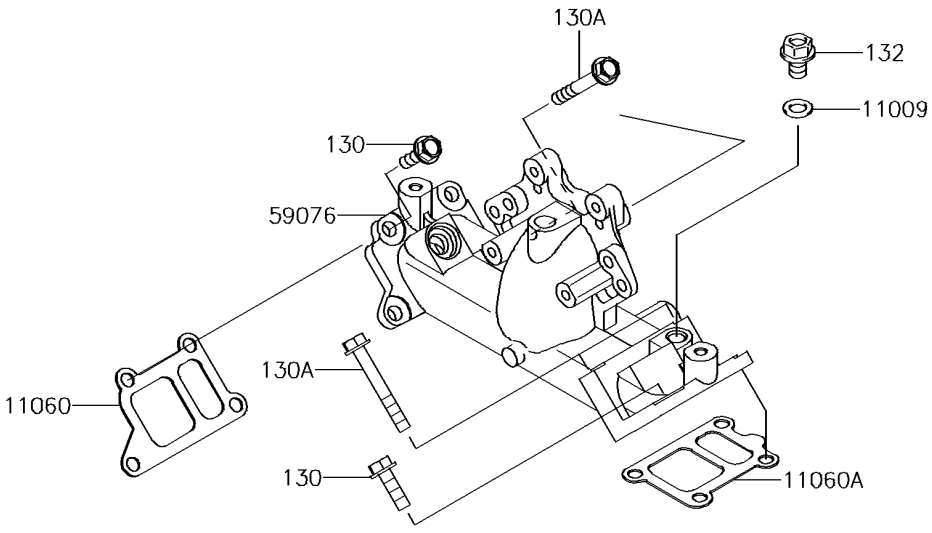


© 2026 Kawasaki Motors Corp., U.S.A.

# 2017 MULE™ 4010 4x4

## PARTS LIST

### Throttle

| ITEM NAME | PART NUMBER | QUANTITY |
|---|---|---|
| GASKET,8.2X14X1.0 (Ref # 11009) | 11009-1344 | 1 |
| GASKET,INTAKE MANIFOLD (Ref # 11060) | 11060-2087 | 1 |
| GASKET,INTAKE MANIFOLD (Ref # 11060A) | 11060-2088 | 1 |
| GASKET (Ref # 11061) | 11061-0861 | 1 |
| GASKET (Ref # 11061A) | 11061-2179 | 1 |
| DUCT (Ref # 14073) | 14073-0780 | 1 |
| THROTTLE-ASSY (Ref # 16163) | 16163-0793 | 1 |
| SENSOR (Ref # 21176) | 21176-2112 | 2 |
| MANIFOLD-INTAKE (Ref # 59076) | 59076-0718 | 1 |
| STUD,6X200 (Ref # 92004) | 92004-2161 | 4 |
| NUT,FLANGED,6MM (Ref # 92015) | 92015-1367 | 4 |
| SEAL (Ref # 92093) | 92093-2133 | 2 |
| COLLAR (Ref # 92152) | 92152-2093 | 2 |
| COLLAR,LWR SIDE (Ref # 92152A) | 92152-2333 | 2 |
| BOLT,FLANGED,6X195 (Ref # 92154) | 92154-2653 | 4 |
| SCREW (Ref # 92172) | 92172-0254 | 4 |
| SCREW (Ref # 92172A) | 92172-2106 | 1 |
| NUT (Ref # 92210) | 92210-2120 | 1 |
| BOLT-FLANGED,6X20 (Ref # 130) | 130BA0620 | 5 |
| BOLT-FLANGED,6X45 (Ref # 130A) | 130CA0645 | 3 |
| BOLT-FLANGED-SMALL,8X12 (Ref # 132) | 132BB0812 | 1 |

© 2026 Kawasaki Motors Corp., U.S.A.