2013 MULE™ 4010 TRANS4x4 Realtree APG HD

Kawasaki
Let the Good Times Roll®

PARTS DIAGRAM

Frame Fittings(SCF/SDF)

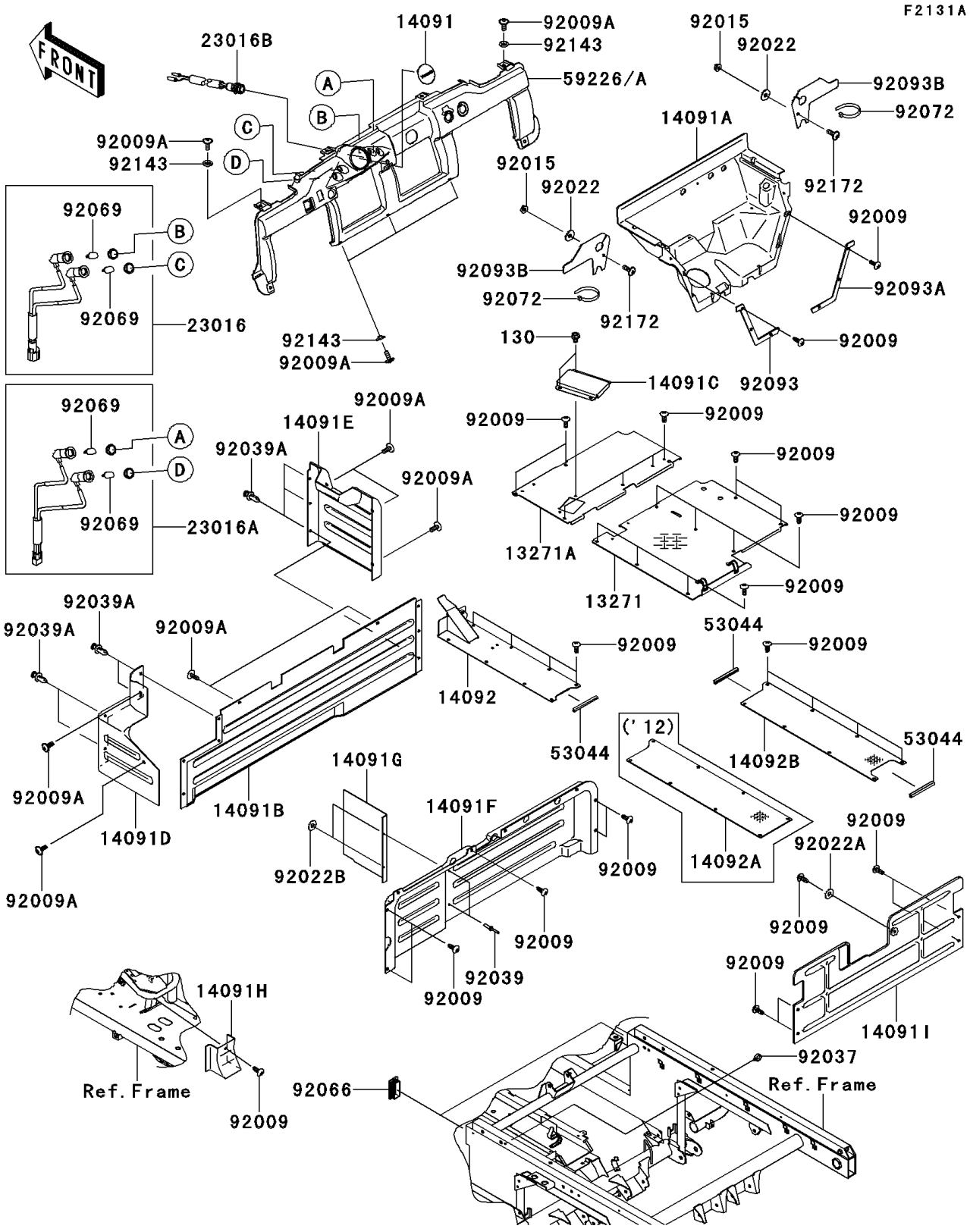

© 2026 Kawasaki Motors Corp., U.S.A.

2013 MULE™ 4010 TRANS4x4 Realtree APG HD

Kawasaki
Let the Good Times Roll®

PARTS LIST

Frame Fittings(SCF/SDF)

ITEM NAME	PART NUMBER	QUANTITY
PLATE,FLOOR,RH (Ref # 13271)	13271-7602	1
PLATE,FLOOR,RH (Ref # 13271A)	13271-7606	1
COVER,SPEEDOMETER,F.BLACK (Ref # 14091)	14091-0929-6Z	1
COVER,FLOOR (Ref # 14091A)	14091-1378	1
COVER,FRONT SEAT,CNT (Ref # 14091B)	14091-7531	1
COVER (Ref # 14091C)	14091-7536	1
COVER,FRONT SEAT,LH (Ref # 14091D)	14091-7541	1
COVER,FRONT SEAT,RH (Ref # 14091E)	14091-7542	1
COVER,FRONT SEAT,RR,LWR (Ref # 14091F)	14091-7549	1
COVER,FUEL TANK (Ref # 14091G)	14091-7550	1
COVER,PARKING CABLE (Ref # 14091H)	14091-7551	1
COVER,REAR SEAT,LWR (Ref # 14091I)	14091-7557	1
COVER,FLOOR,CNT,FR (Ref # 14092)	14092-0832	1
COVER,FLOOR,CNT,RR (Ref # 14092B)	14092-0993	1
LAMP-ASSY,PARKING&WATER TEMP (Ref # 23016)	23016-0035	1
LAMP-ASSY,DFI&OIL PRESSURE (Ref # 23016A)	23016-0036	1
LAMP-ASSY,LED (Ref # 23016B)	23016-7501	1
TRIM,L=111 (Ref # 53044)	53044-7502	3
PANEL-CONTROL,F.BLACK (Ref # 59226A)	59226-0026-6Z	1
SCREW,TAPPING,6X16 (Ref # 92009)	92009-1166	50
SCREW,6X16 (Ref # 92009A)	92009-1621	12
NUT,FLANGED,6MM (Ref # 92015)	92015-1367	2
WASHER,6.5X20X1.6,BLACK (Ref # 92022)	92022-1346	2
WASHER,7X18X1.2 (Ref # 92022A)	92022-1545	1
WASHER,4.3X12.5X1 (Ref # 92022B)	92022-1949	2
CLAMP,HOSE (Ref # 92037)	92037-1827	1
RIVET (Ref # 92039)	92039-1150	2
RIVET (Ref # 92039A)	92039-1229	7
PLUG (Ref # 92066)	92066-7505	2

© 2026 Kawasaki Motors Corp., U.S.A.

2013 MULE™ 4010 TRANS4x4 Realtree APG HD

Kawasaki
Let the Good Times Roll®

PARTS LIST

Frame Fittings(SCF/SDF)

ITEM NAME	PART NUMBER	QUANTITY
BULB,12V 1.7W,T10 (Ref # 92069)	92069-1059	4
BAND,L=368.3 (Ref # 92072)	92072-3872	2
SEAL,FRONT FENDER,LH (Ref # 92093)	92093-1293	1
SEAL,FRONT FENDER,RH (Ref # 92093A)	92093-1294	1
SEAL,LOWER COVER (Ref # 92093B)	92093-1295	2
COLLAR (Ref # 92143)	92143-1087	5
SCREW,6X18 (Ref # 92172)	92172-0002	2
BOLT-FLANGED,6X10 (Ref # 130)	130BA0610	2

© 2026 Kawasaki Motors Corp., U.S.A.