2013 MULE™ 4010 TRANS4x4 Realtree APG HD

Kawasaki
Let the Good Times Roll®

PARTS DIAGRAM

Starter Motor(FD620DE485833-)

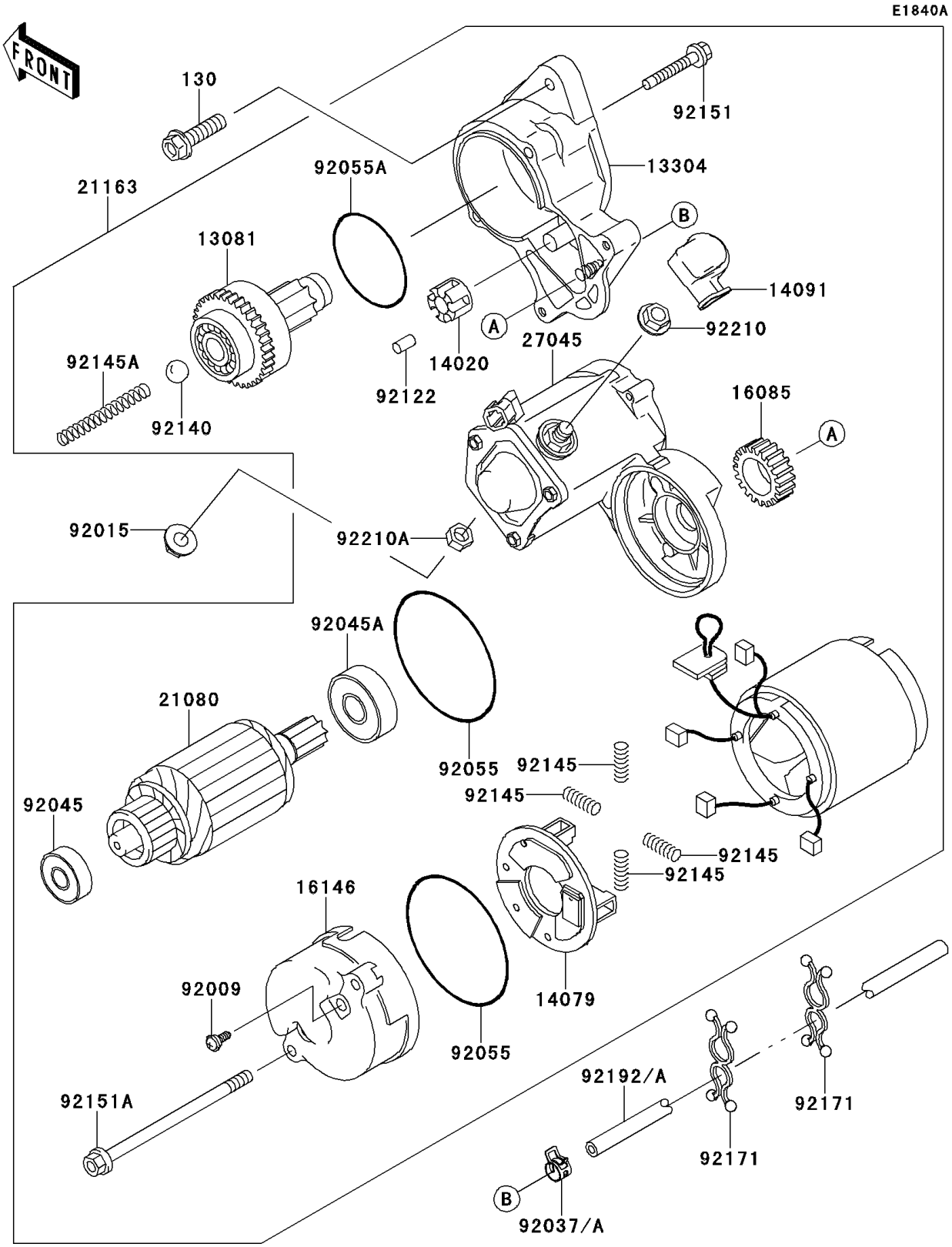

© 2026 Kawasaki Motors Corp., U.S.A.

2013 MULE™ 4010 TRANS4x4 Realtree APG HD

Kawasaki
Let the Good Times Roll®

PARTS LIST

Starter Motor(FD620DE485833-)

ITEM NAME	PART NUMBER	QUANTITY
CLUTCH-ASSY (Ref # 13081)	13081-2231	1
HOUSING-ASSY (Ref # 13304)	13304-2253	1
RETAINER (Ref # 14020)	14020-2112	1
HOLDER-ASSY (Ref # 14079)	14079-2064	1
COVER (Ref # 14091)	14091-2080	1
GEAR (Ref # 16085)	16085-2055	1
COVER-ASSY (Ref # 16146)	16146-2243	1
ARMATURE (Ref # 21080)	21080-2070	1
STARTER-ELECTRIC (Ref # 21163)	21163-2134	1
SWITCH-ASSY (Ref # 27045)	27045-2020	1
SCREW (Ref # 92009)	92009-2455	2
NUT,8MM (Ref # 92015)	92015-1143	1
CLAMP (Ref # 92037A)	92037-2113	1
BEARING-BALL (Ref # 92045)	92045-2257	1
BEARING-BALL (Ref # 92045A)	92045-2258	1
RING-O (Ref # 92055)	92055-2199	2
RING-O (Ref # 92055A)	92055-2200	1
ROLLER (Ref # 92122)	92122-2057	5
BALL (Ref # 92140)	92140-2061	1
SPRING (Ref # 92145)	92145-2096	4
SPRING (Ref # 92145A)	92145-2097	1
BOLT (Ref # 92151)	92151-2167	2
BOLT (Ref # 92151A)	92151-2168	2
CLAMP (Ref # 92171)	92171-0476	2
TUBE,4.7X9.5X1000 (Ref # 92192A)	92192-0937	1
NUT (Ref # 92210)	92210-2084	1
NUT (Ref # 92210A)	92210-2085	1
BOLT-FLANGED,8X30 (Ref # 130)	130CA0830	2

© 2026 Kawasaki Motors Corp., U.S.A.