2012 MULE™ 4010 TRANS4x4® CAMO

PARTS DIAGRAM

Generator/Ignition Coil

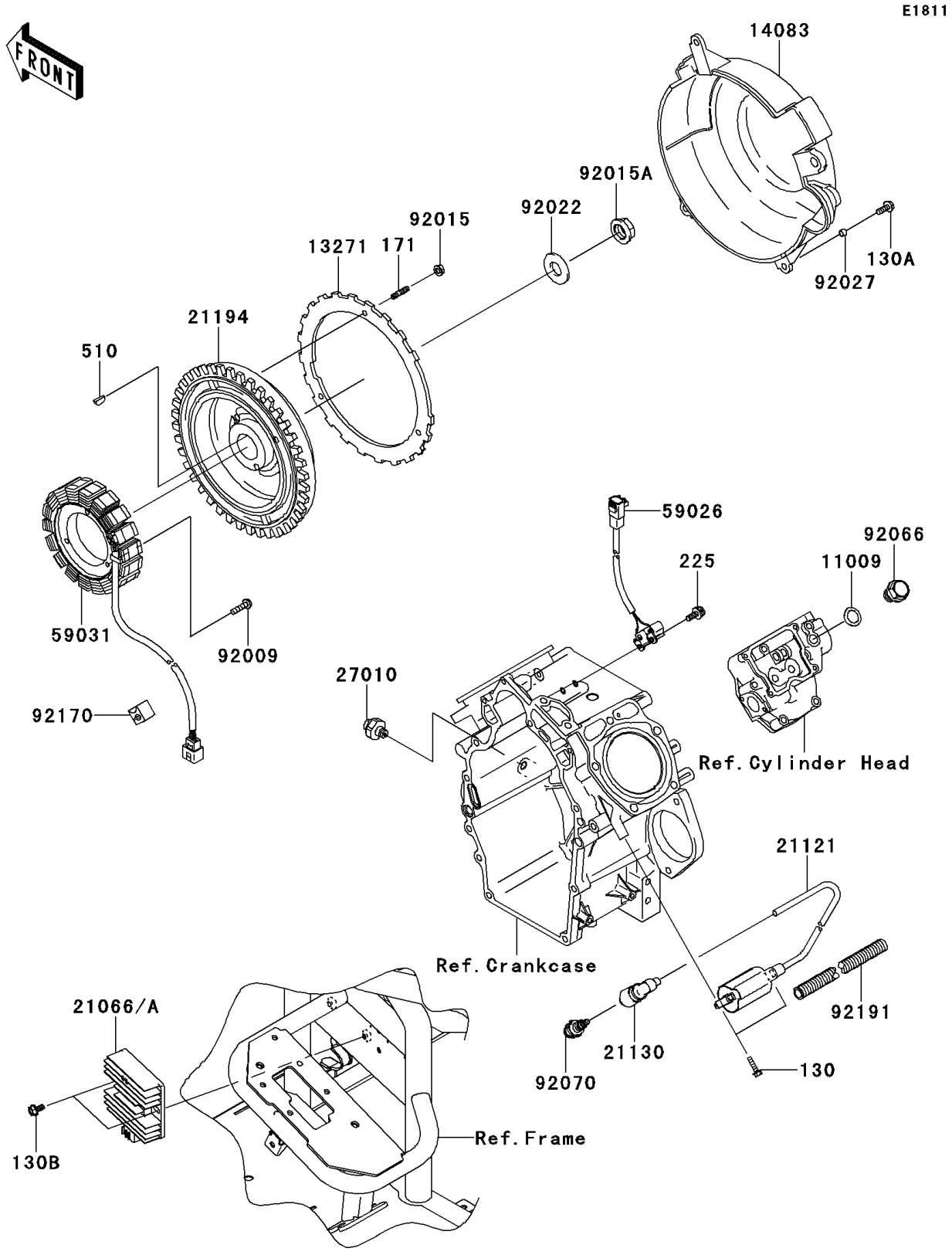

© 2026 Kawasaki Motors Corp., U.S.A.

2012 MULE™ 4010 TRANS4x4® CAMO

Kawasaki
Let the Good Times Roll®

PARTS LIST

Generator/Ignition Coil

ITEM NAME	PART NUMBER	QUANTITY
GASKET,16X24X1 (Ref # 11009)	11009-2566	1
PLATE (Ref # 13271)	13271-2269	1
COVER-FLYWHEEL (Ref # 14083)	14083-2052	1
REGULATOR-VOLTAGE (Ref # 21066)	21066-0037	1
COIL-IGNITION (Ref # 21121)	21121-2092	2
CAP-SPARK PLUG (Ref # 21130)	21130-2060	2
FLYWHEEL-COMP (Ref # 21194)	21194-2352	1
SWITCH,OIL PRESSURE (Ref # 27010)	27010-1313	1
COIL-PULSING (Ref # 59026)	59026-2065	1
COIL-CHARGING (Ref # 59031)	59031-2136	1
SCREW (Ref # 92009)	92009-2273	3
NUT,FLANGED,6MM (Ref # 92015)	92015-1367	3
NUT (Ref # 92015A)	92015-2167	1
WASHER (Ref # 92022)	92022-2229	1
COLLAR,6.2X7.8X5 (Ref # 92027)	92027-2096	3
PLUG,DRAIN (Ref # 92066)	92066-2099	1
PLUG-SPARK,BPR2ES(NGK),SOLID (Ref # 92070)	92070-2110	2
CLAMP (Ref # 92170)	92170-2056	1
TUBE (Ref # 92191)	92191-2124	1
BOLT-FLANGED,5X20 (Ref # 130)	130AA0520	4
BOLT-FLANGED,6X16 (Ref # 130A)	130AA0616	3
BOLT-FLANGED,6X14 (Ref # 130B)	130BB0614	2
BOLT-STUD,6X18 (Ref # 171)	171BA0618	3
SCREW-PAN-WSP-CROS,4X14 (Ref # 225)	225AA0414	2
KEY-WOODRUFF (Ref # 510)	510A5100	1

© 2026 Kawasaki Motors Corp., U.S.A.