2013 MULE™ 4010 TRANS4x4 Realtree APG HD

Kawasaki
Let the Good Times Roll®

PARTS DIAGRAM

Differential

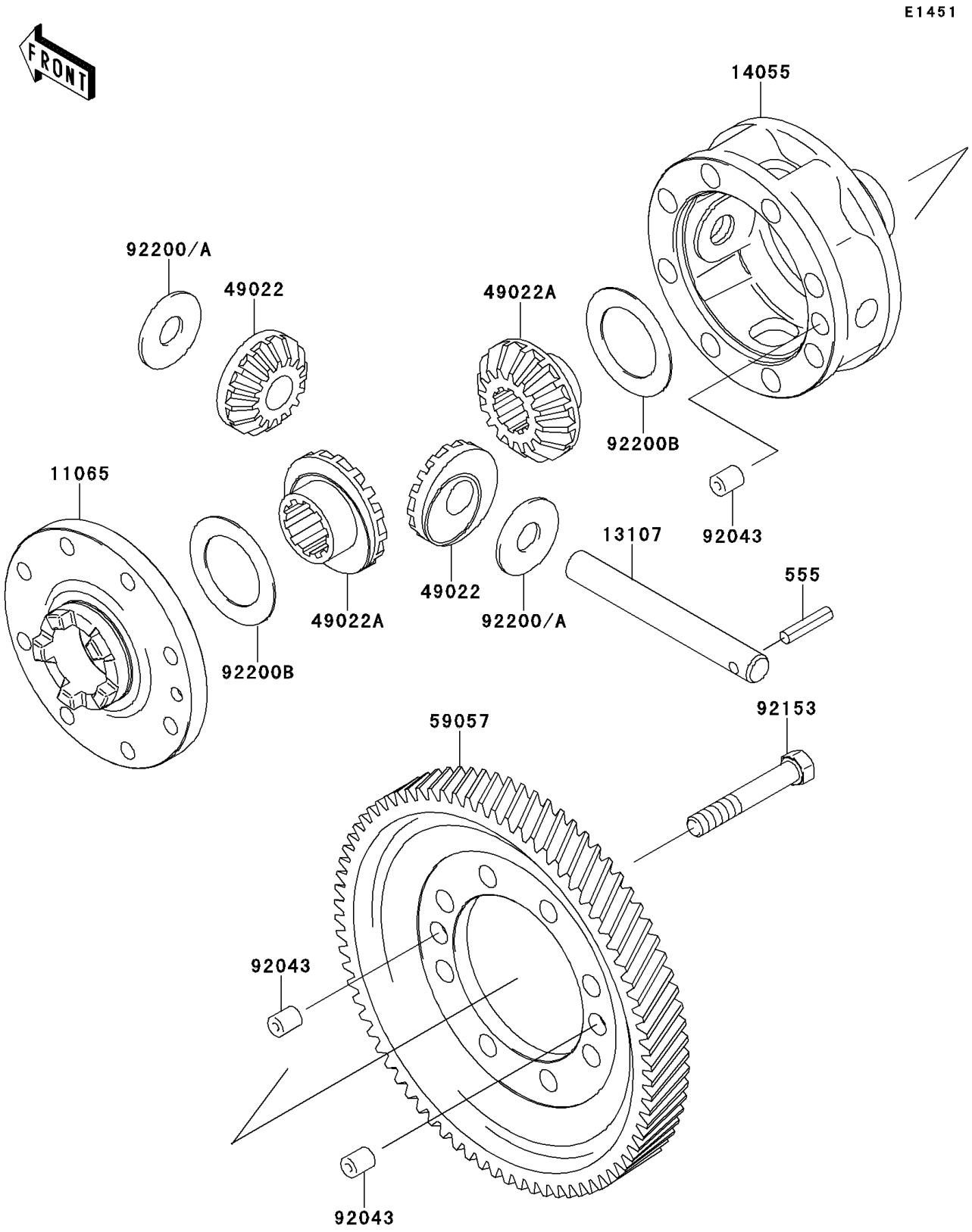

© 2026 Kawasaki Motors Corp., U.S.A.

2013 MULE™ 4010 TRANS4x4 Realtree APG HD

Kawasaki
Let the Good Times Roll®

PARTS LIST

Differential

ITEM NAME	PART NUMBER	QUANTITY
CAP,GEAR CASE (Ref # 11065)	11065-0033	1
SHAFT (Ref # 13107)	13107-0009	1
CASE-GEAR,DIFFERENTIAL (Ref # 14055)	14055-0003	1
GEAR-BEVEL,10T (Ref # 49022)	49022-1105	2
GEAR-BEVEL,16T (Ref # 49022A)	49022-1117	2
GEAR-HELICAL,DIFFERENTIAL (Ref # 59057)	59057-0002	1
PIN,10X12 (Ref # 92043)	92043-0029	3
BOLT,10X63 (Ref # 92153)	92153-0331	8
WASHER,14.5X38X1.2 (Ref # 92200)	92200-0021	2
WASHER,14.5X38X1.0 (Ref # 92200A)	92200-1044	AR
WASHER,35.5X54X1.0 (Ref # 92200B)	92200-1045	2
PIN-SPRING (Ref # 555)	555A0525	1

© 2026 Kawasaki Motors Corp., U.S.A.