2009 Mule 4000

PARTS DIAGRAM

Labels

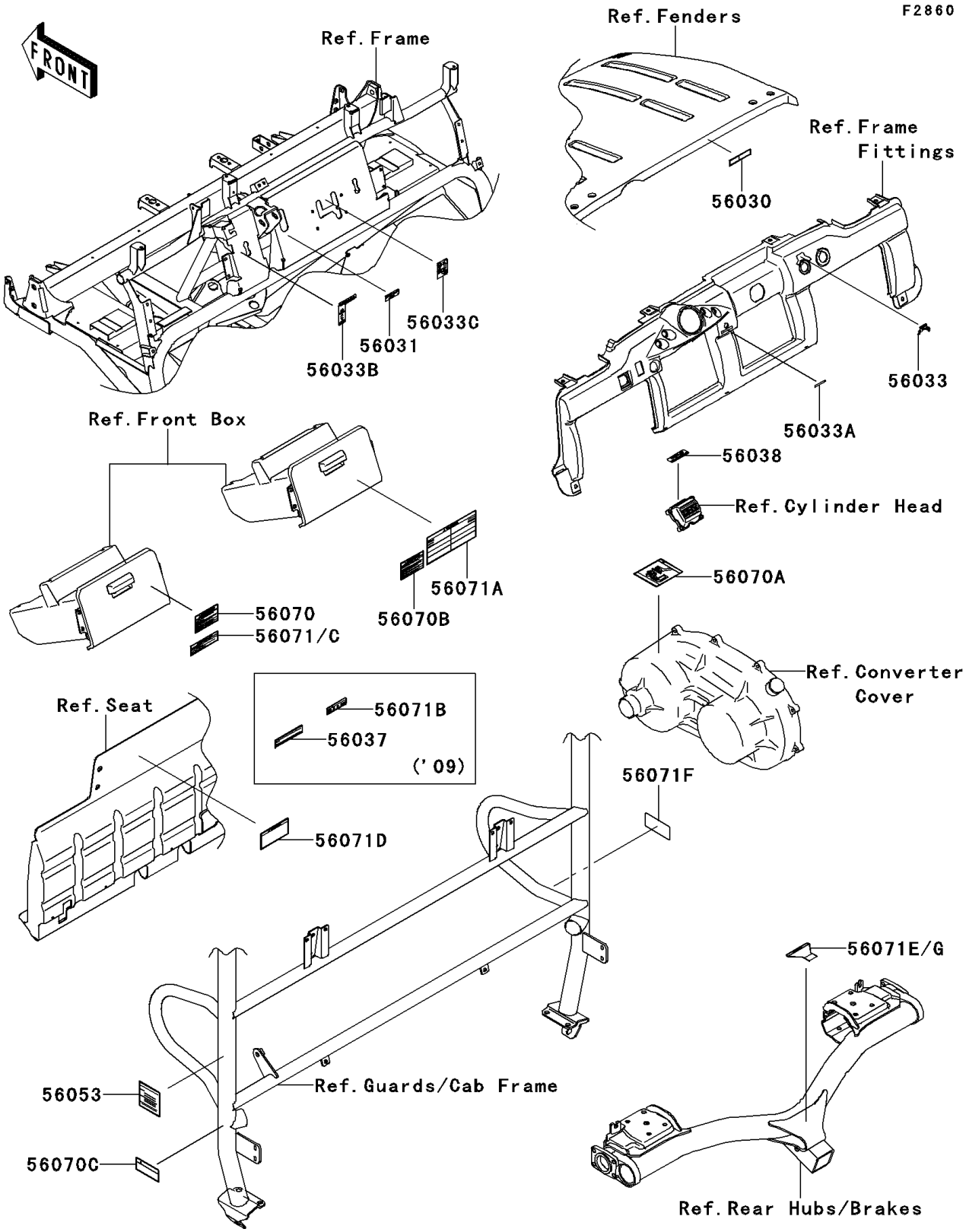

© 2026 Kawasaki Motors Corp., U.S.A.

2009 Mule 4000

PARTS LIST

Labels

ITEM NAME	PART NUMBER	QUANTITY
LABEL,OPERATING HOOD (Ref # 56030)	56030-0267	1
LABEL-MANUAL,BRAKE FLUID LEVEL (Ref # 56031)	56031-1818	1
LABEL-MANUAL,IGNITION (Ref # 56033)	56033-0212	1
LABEL-MANUAL,POWER STEERING (Ref # 56033A)	56033-0213	1
LABEL-MANUAL,DIFF MODE (Ref # 56033B)	56033-1183	1
LABEL-MANUAL,SHIFT (Ref # 56033C)	56033-1205	1
LABEL-SPECIFICATION,CARGO BED (Ref # 56037)	56037-1576	1
LABEL-BRAND (Ref # 56038)	56038-2782	1
LABEL-SPECIFICATION,TIRE (Ref # 56053)	56053-7534	1
LABEL-WARNING,OFF-HIGHWAY (Ref # 56070)	56070-0050	1
LABEL-WARNING,HOT SURFACES (Ref # 56070A)	56070-0051	1
LABEL-WARNING,BONNET OPERATION (Ref # 56070B)	56070-0053	1
LABEL-WARNING,BED RAISED (Ref # 56070C)	56070-7515	1
LABEL-WARNING,SHIFT CAUTION (Ref # 56071)	56071-0088	1
LABEL-WARNING,GENERAL (Ref # 56071A)	56071-0101	1
LABEL-WARNING,CARGO BED (Ref # 56071B)	56071-0107	1
LABEL-WARNING,GASOLINE (Ref # 56071F)	56071-7501	1
LABEL-WARNING,TRAILER HITCH (Ref # 56071G)	56071-7511	1

© 2026 Kawasaki Motors Corp., U.S.A.