2013 MULE™ 4000

PARTS DIAGRAM

Front Suspension

F2152

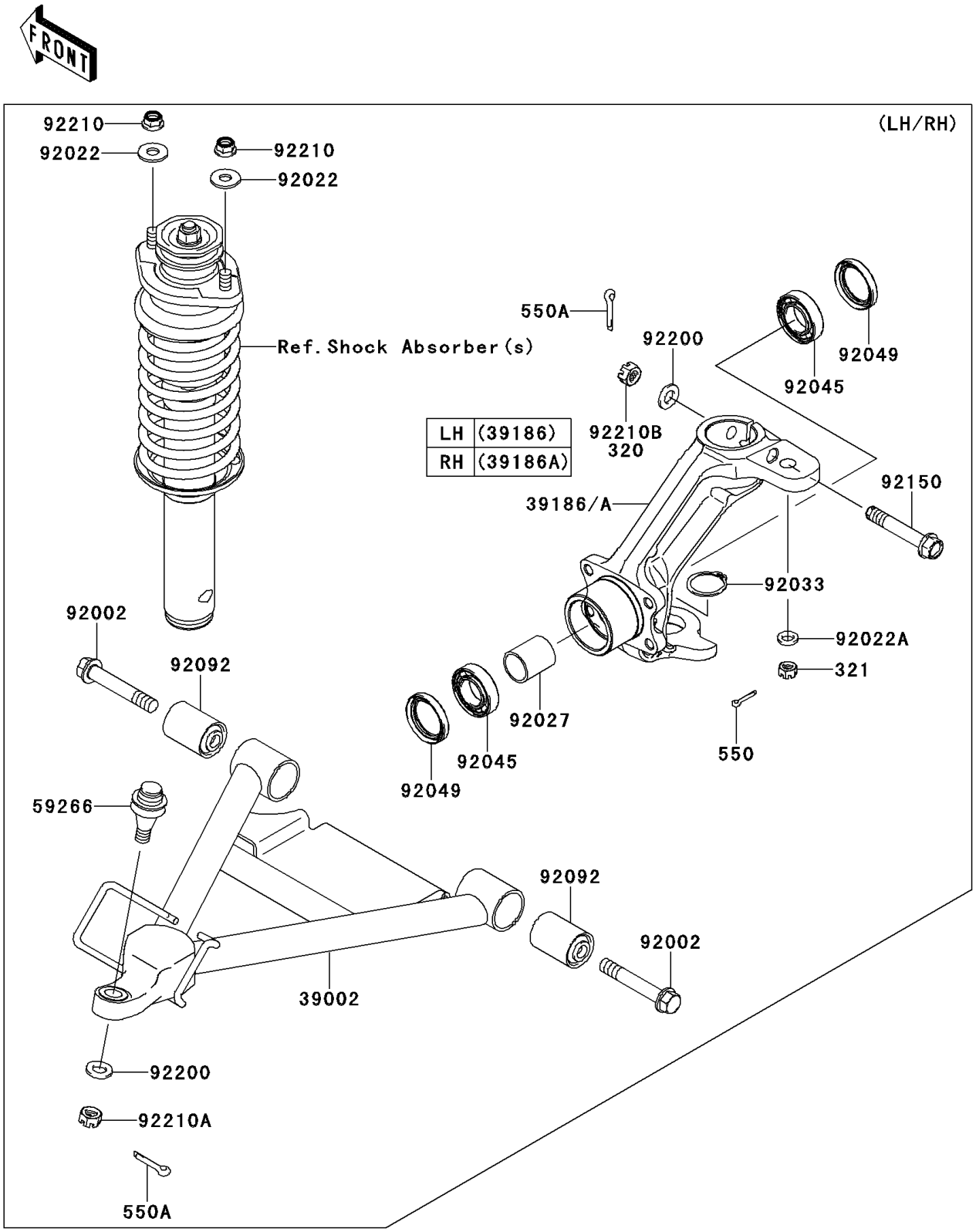

© 2026 Kawasaki Motors Corp., U.S.A.

2013 MULE™ 4000

PARTS LIST

Front Suspension

ITEM NAME	PART NUMBER	QUANTITY

© 2026 Kawasaki Motors Corp., U.S.A.