2002 ZRX1200R

PARTS DIAGRAM

Owner's Tools

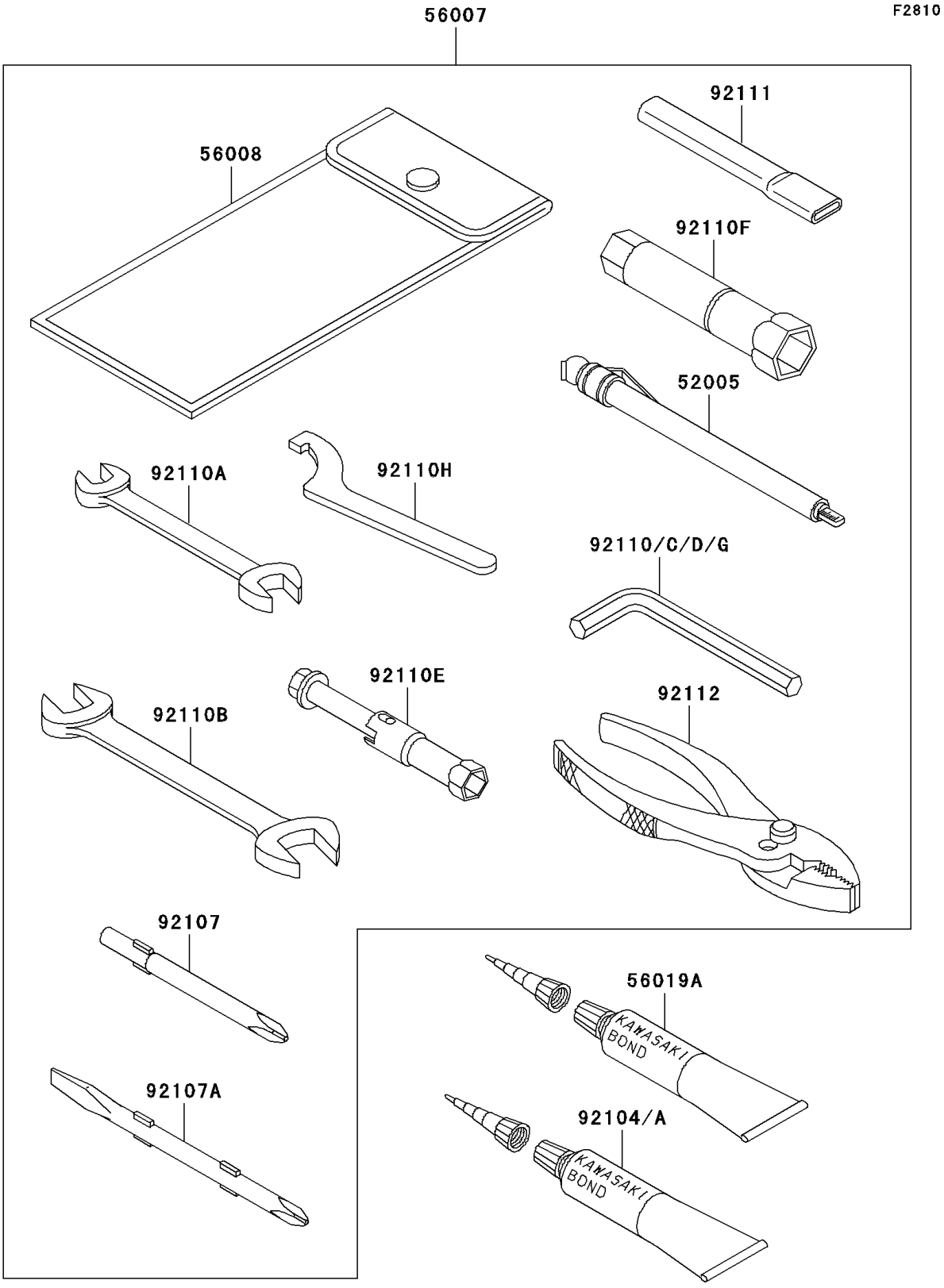

© 2026 Kawasaki Motors Corp., U.S.A.

2002 ZRX1200R

PARTS LIST

Owner's Tools

ITEM NAME	PART NUMBER	QUANTITY
GAUGE,AIR,350KPA/50PSI (Ref # 52005)	52005-1142	1
TOOL-KIT (Ref # 56007)	56007-1482	1
BAG,TOOL (Ref # 56008)	56008-006	1
THREE BOND TB1211,HT/RS,WHITE (Ref # 56019A)	56019-120	1
GASKET-LIQUID,TUBE,100G,BLACK (Ref # 92104)	92104-1003	1
GASKET-LIQUID,SILVER TB1216 (Ref # 92104A)	92104-1063	AR
TOOL-DRIVER,#3PHILLIPS (Ref # 92107)	92107-1002	1
TOOL-DRIVER,#2PHILLIPS&SLOT (Ref # 92107A)	92107-1052	1
TOOL-WRENCH,ALLEN,5MM (Ref # 92110)	92110-1015	1
TOOL-WRENCH,OPEN END,10X12 (Ref # 92110A)	92110-1038	1
TOOL-WRENCH,OPEN END,14X17 (Ref # 92110B)	92110-1045	1
TOOL-WRENCH,ALLEN,12MM (Ref # 92110C)	92110-1104	1
TOOL-WRENCH,ALLEN,8MM (Ref # 92110D)	92110-1108	1
TOOL-WRENCH,BOX,16MM (Ref # 92110E)	92110-1132	1
TOOL-WRENCH,BOX,18MM (Ref # 92110F)	92110-1135	1
TOOL-WRENCH,ALLEN,3MM (Ref # 92110G)	92110-1140	1
TOOL-WRENCH,HOOK (Ref # 92110H)	92110-1144	1
TOOL-BAR,BOX END WRENCH (Ref # 92111)	92111-1052	1
TOOL-PLIERS (Ref # 92112)	92112-003	1

© 2026 Kawasaki Motors Corp., U.S.A.