2011 Mule 4010 Trans4x4

PARTS DIAGRAM

Throttle

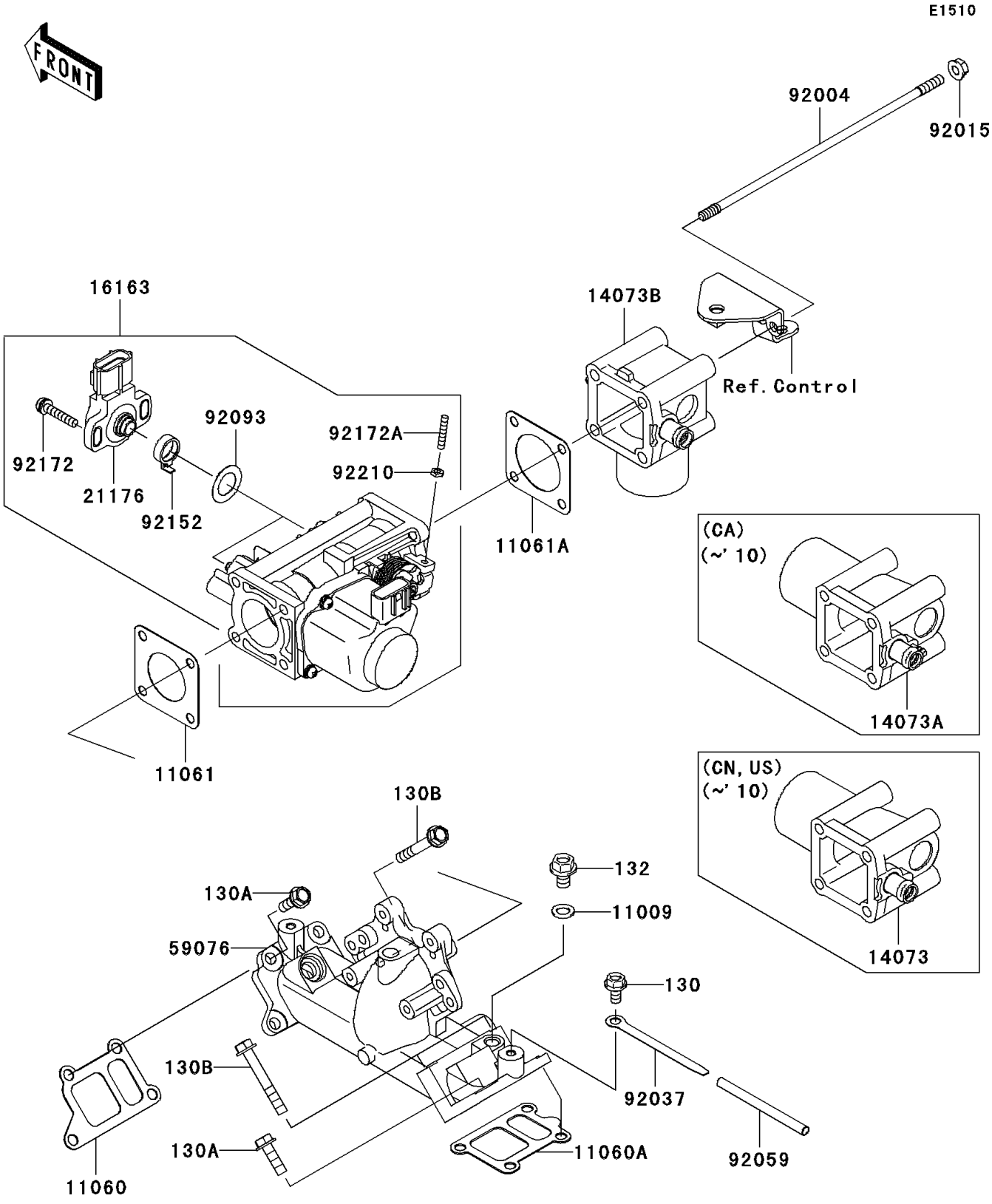

© 2026 Kawasaki Motors Corp., U.S.A.

2011 Mule 4010 Trans4x4

PARTS LIST

Throttle

ITEM NAME	PART NUMBER	QUANTITY
GASKET,8.2X14X1.0 (Ref # 11009)	11009-1344	1
GASKET,INTAKE MANIFOLD (Ref # 11060)	11060-2087	1
GASKET,INTAKE MANIFOLD (Ref # 11060A)	11060-2088	1
GASKET (Ref # 11061)	11061-2179	1
GASKET (Ref # 11061A)	11061-2180	1
DUCT (Ref # 14073)	14073-2091	1
DUCT (Ref # 14073A)	14073-2095	1
DUCT (Ref # 14073B)	14073-2100	1
THROTTLE-ASSY (Ref # 16163)	16163-2072	1
SENSOR (Ref # 21176)	21176-2112	2
MANIFOLD-INTAKE (Ref # 59076)	59076-2092	1
STUD,6X200 (Ref # 92004)	92004-2161	4
NUT,FLANGED,6MM (Ref # 92015)	92015-1367	4
CLAMP (Ref # 92037)	92037-2006	1
TUBE,5X6X75 (Ref # 92059)	92059-2011	1
SEAL (Ref # 92093)	92093-2133	2
COLLAR (Ref # 92152)	92152-2093	2
SCREW (Ref # 92172)	92172-0254	4
SCREW (Ref # 92172A)	92172-2106	1
NUT (Ref # 92210)	92210-2120	1
BOLT-FLANGED,6X12 (Ref # 130)	130AA0612	1
BOLT-FLANGED,6X20 (Ref # 130A)	130AA0620	5
BOLT-FLANGED,6X45 (Ref # 130B)	130AA0645	3
BOLT-FLANGED-SMALL,8X12 (Ref # 132)	132BB0812	1

© 2026 Kawasaki Motors Corp., U.S.A.