2012 MULE™ 4010 4x4

PARTS DIAGRAM

Fuel Tank(M9F/MAF)

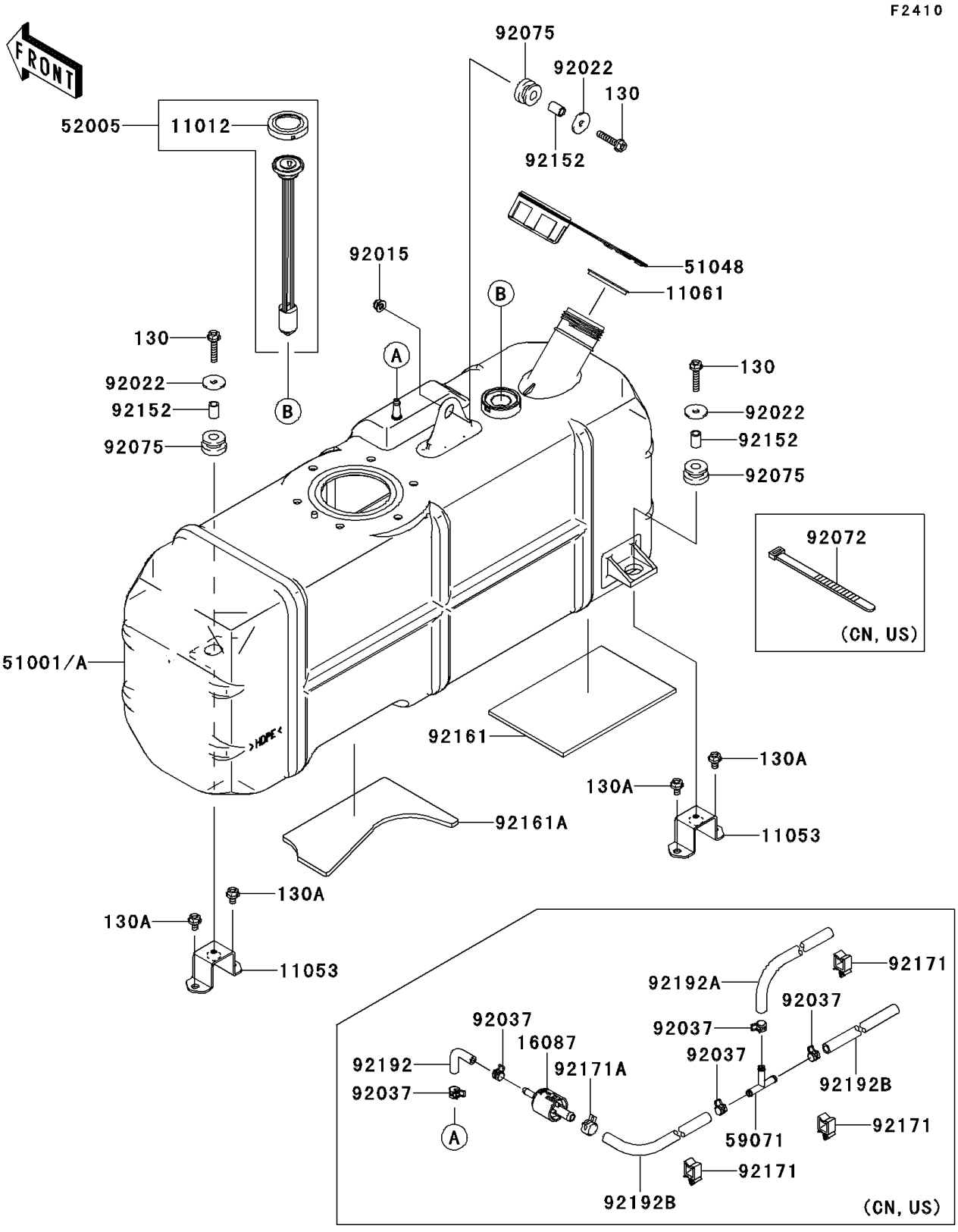

© 2026 Kawasaki Motors Corp., U.S.A.

2012 MULE™ 4010 4x4

PARTS LIST

Fuel Tank(M9F/MAF)

ITEM NAME	PART NUMBER	QUANTITY
CAP,FUEL GAUGE (Ref # 11012)	11012-1627	1
BRACKET (Ref # 11053)	11053-7512	2
GASKET,FUEL TANK CAP (Ref # 11061)	11061-0395	1
VALVE-CHECK (Ref # 16087)	16087-0002	1
TANK-COMP-FUEL (Ref # 51001)	51001-0292	1
TANK-COMP-FUEL (Ref # 51001A)	51001-0293	1
CAP-ASSY-TANK,FUEL (Ref # 51048)	51048-0026	1
GAUGE,FUEL (Ref # 52005)	52005-7501	1
JOINT (Ref # 59071)	59071-3705	1
NUT,LOCK,FLANGED,6MM (Ref # 92015)	92015-1675	1
WASHER,6.5X24X2 (Ref # 92022)	92022-1690	3
CLAMP,TUBE (Ref # 92037)	92037-1461	5
BAND,L=123 (Ref # 92072)	92072-030	1
DAMPER (Ref # 92075)	92075-1787	3
COLLAR,7.02X10.32X15.3 (Ref # 92152)	92152-7511	3
DAMPER,92X35X4.76 (Ref # 92161)	92161-7508	1
DAMPER,92X19X4.76 (Ref # 92161A)	92161-7513	1
CLAMP (Ref # 92171)	92171-0290	3
CLAMP (Ref # 92171A)	92171-0515	1
TUBE,FUEL TANK-CHECK VALVE (Ref # 92192)	92192-0067	1
TUBE,7X11X370 (Ref # 92192A)	92192-7512	1
TUBE,7X11X225 (Ref # 92192B)	92192-7513	2
BOLT-FLANGED,6X30 (Ref # 130)	130BA0630	3
BOLT-FLANGED,6X10 (Ref # 130A)	130BB0610	4

© 2026 Kawasaki Motors Corp., U.S.A.