2012 MULE™ 4010 4x4

PARTS DIAGRAM

Steering Wheel(M9F-MCF)

F2311



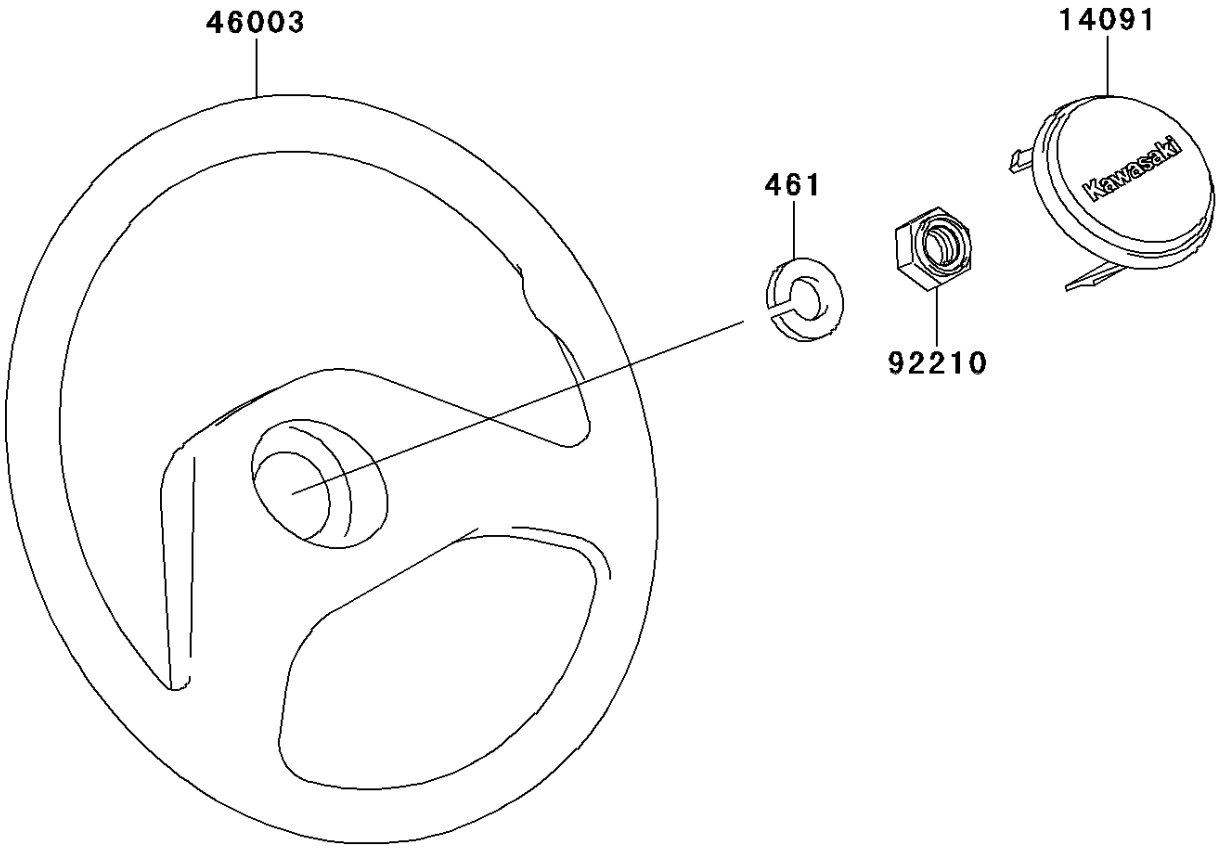

© 2026 Kawasaki Motors Corp., U.S.A.

2012 MULE™ 4010 4x4

PARTS LIST

Steering Wheel(M9F-MCF)

ITEM NAME	PART NUMBER	QUANTITY
COVER,HORN SWITCH (Ref # 14091)	14091-1247	1
HANDLE (Ref # 46003)	46003-1308	1
NUT,LOCK,12MM (Ref # 92210)	92210-1249	1
WASHER-SPRING,12MM (Ref # 461)	461DA1200	1

© 2026 Kawasaki Motors Corp., U.S.A.