2012 MULE™ 4010 4x4

PARTS DIAGRAM

Wheels/Tires

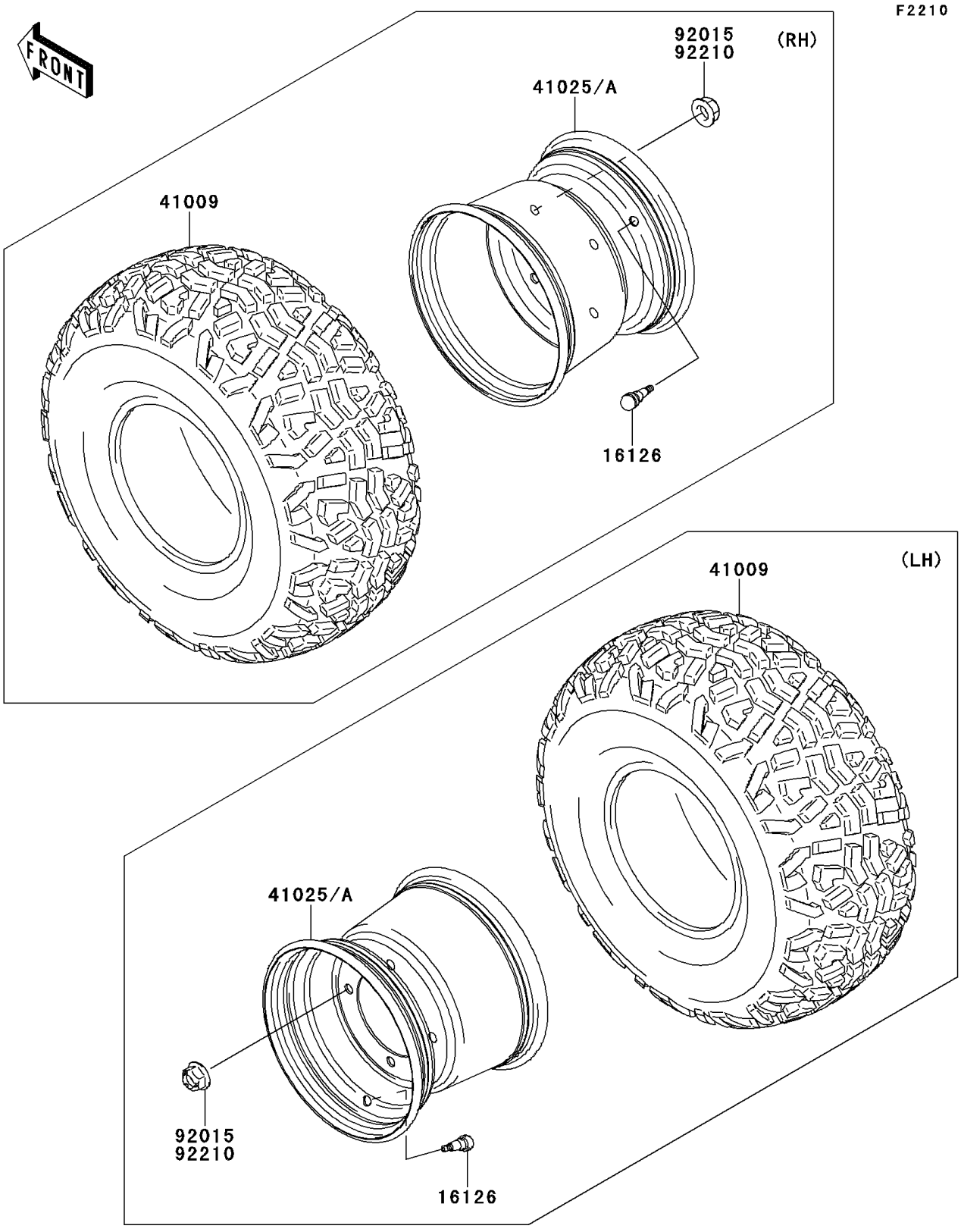

© 2026 Kawasaki Motors Corp., U.S.A.

2012 MULE™ 4010 4x4

PARTS LIST

Wheels/Tires

ITEM NAME	PART NUMBER	QUANTITY
VALVE (Ref # 16126)	16126-4001	4
TIRE,23X11.00-10 4PR (Ref # 41009)	41009-0294	4
RIM,10X8.5AT,SILVER (Ref # 41025)	41025-7504-16H	4
RIM,10X8.5AT,F.S.BLACK (Ref # 41025A)	41025-7504-397	4
NUT,12MM (Ref # 92015)	92015-1706	16
NUT,12MM (Ref # 92210)	92210-0603	16

© 2026 Kawasaki Motors Corp., U.S.A.