2012 MULE™ 4010 4x4

PARTS DIAGRAM

Driven Converter/Drive Belt

E1392

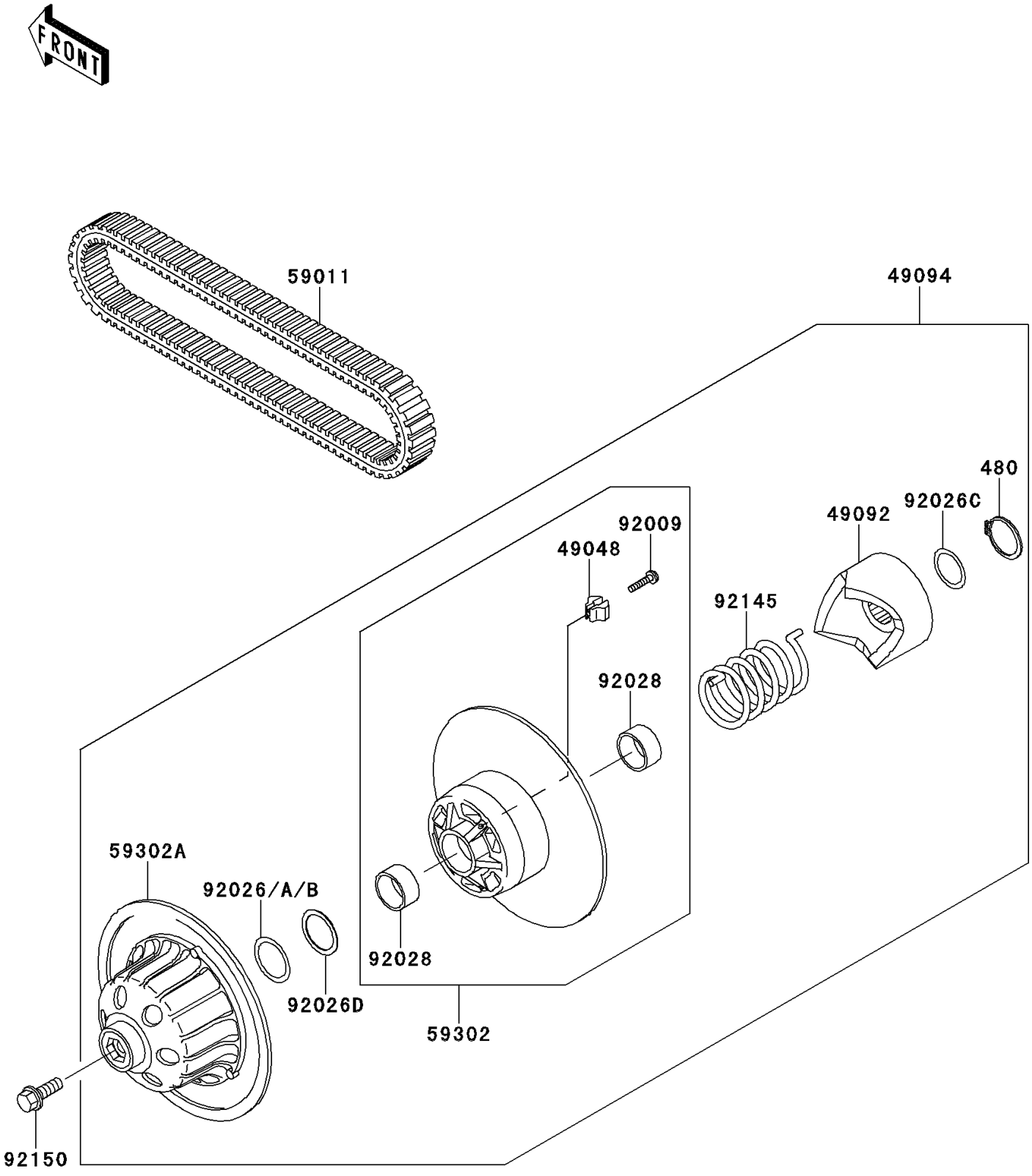

© 2026 Kawasaki Motors Corp., U.S.A.

2012 MULE™ 4010 4x4

PARTS LIST

Driven Converter/Drive Belt

ITEM NAME	PART NUMBER	QUANTITY
SHOE (Ref # 49048)	49048-1060	3
RAMP (Ref # 49092)	49092-1068	1
CONVERTER-ASSY-DRIVEN (Ref # 49094)	49094-0045	1
BELT,CONVERTER (Ref # 59011)	59011-1077	1
SHEAVE-COMP,MOVABLE (Ref # 59302)	59302-0031	1
SHEAVE-COMP (Ref # 59302A)	59302-0032	1
SCREW,SHOE (Ref # 92009)	92009-1849	3
SPACER,39X50X0.50 (Ref # 92026)	92026-1507	AR
SPACER,39X50X0.60 (Ref # 92026A)	92026-1508	AR
SPACER,39X50X0.80 (Ref # 92026B)	92026-1510	AR
SPACER,34X44X0.80 (Ref # 92026C)	92026-1521	1
SPACER,39X49.5X1.0 (Ref # 92026D)	92026-1603	1
BUSHING (Ref # 92028)	92028-1864	2
SPRING (Ref # 92145)	92145-1404	1
BOLT,12X35 (Ref # 92150)	92150-1009	1
CIRCLIP (Ref # 480)	480J3400	1

© 2026 Kawasaki Motors Corp., U.S.A.