2002 ZRX1200R

PARTS DIAGRAM

Brake Pedal/Torque Link

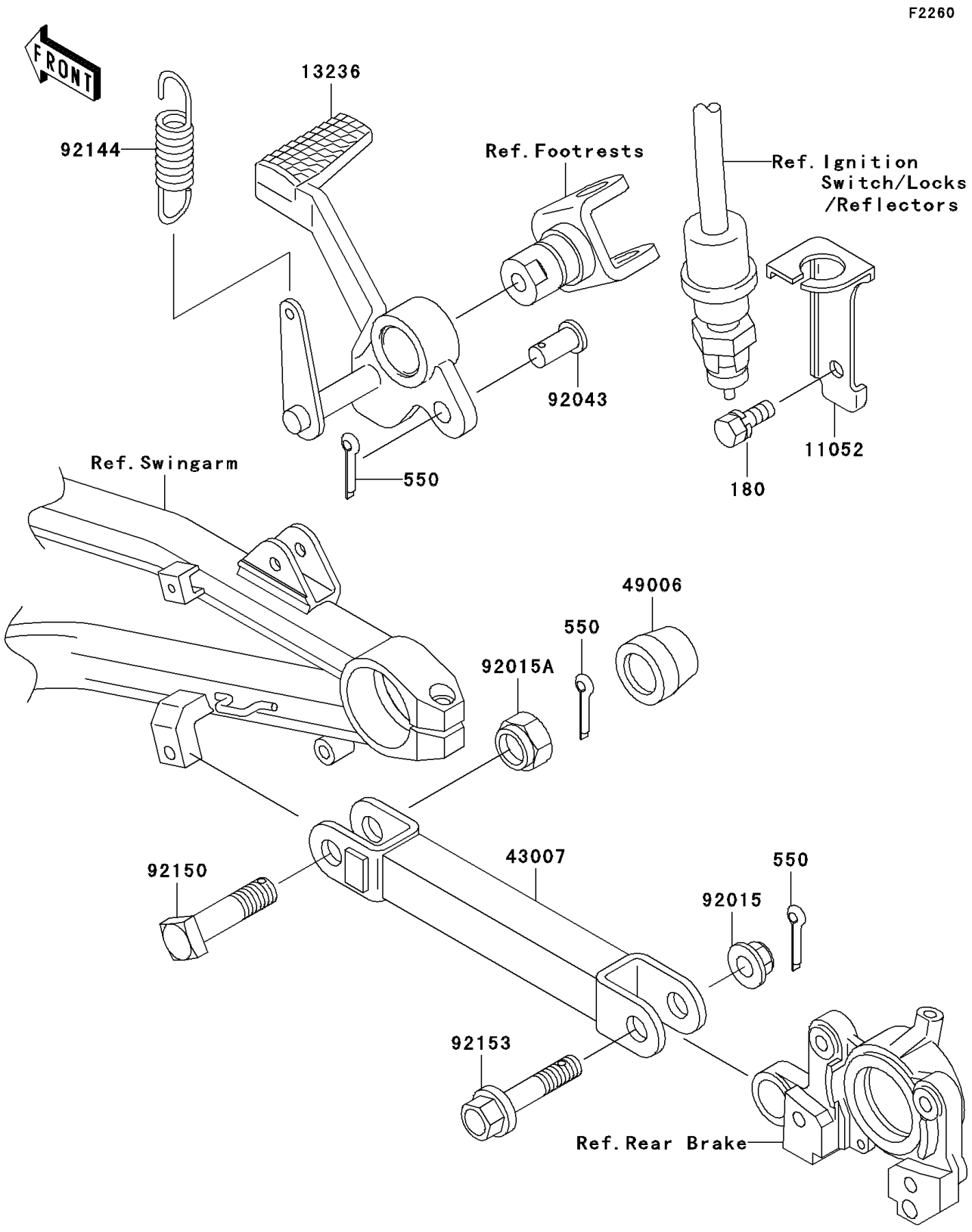

© 2026 Kawasaki Motors Corp., U.S.A.

2002 ZRX1200R

PARTS LIST

Brake Pedal/Torque Link

ITEM NAME	PART NUMBER	QUANTITY
BOLT-UPSET-WS (Ref # 180)	180H0614	1
PIN-COTTER,2.0X15 (Ref # 550)	550D2015	3
BRACKET,RR BRAKE SWITCH (Ref # 11052)	11052-1358	1
LEVER-COMP,PEDAL (Ref # 13236)	13236-1293	1
ROD-TORQUE (Ref # 43007)	43007-1194	1
BOOT (Ref # 49006)	49006-1275	1
NUT,8MM (Ref # 92015)	92015-1432	1
NUT,10MM (Ref # 92015A)	92015-1883	1
PIN,8MM (Ref # 92043)	92043-1303	1
SPRING,PAD (Ref # 92144)	92144-1470	1
BOLT,10X39.5 (Ref # 92150)	92150-1598	1
BOLT,FLANGED,8X38 (Ref # 92153)	92153-1053	1

© 2026 Kawasaki Motors Corp., U.S.A.