2012 MULE™ 4010 4x4

PARTS DIAGRAM

Air Cleaner(M9F/MAF)

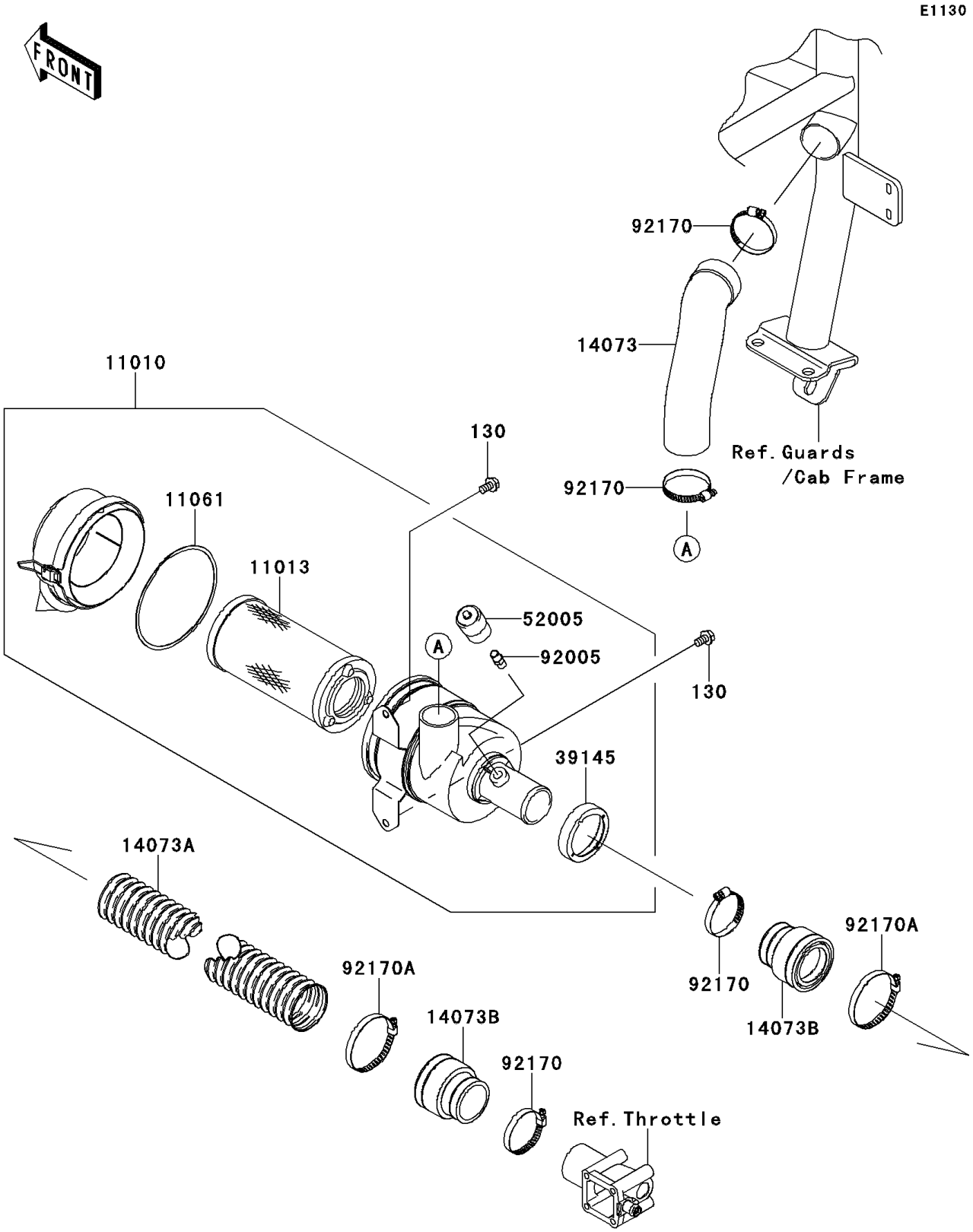

© 2026 Kawasaki Motors Corp., U.S.A.

2012 MULE™ 4010 4x4

PARTS LIST

Air Cleaner(M9F/MAF)

ITEM NAME	PART NUMBER	QUANTITY
FILTER-ASSY-AIR (Ref # 11010)	11010-0177	1
ELEMENT-AIR FILTER (Ref # 11013)	11013-1290	1
GASKET,AIR FILTER (Ref # 11061)	11061-1078	1
DUCT,RR BAR-A/C (Ref # 14073)	14073-0236	1
DUCT (Ref # 14073A)	14073-7504	1
DUCT,ADAPTER (Ref # 14073B)	14073-7505	2
TRIM-SEAL (Ref # 39145)	39145-1133	1
GAUGE,AIR (Ref # 52005)	52005-7502	1
FITTING,AIR FILTER (Ref # 92005)	92005-1386	1
CLAMP (Ref # 92170)	92170-1674	4
CLAMP (Ref # 92170A)	92170-1764	2
BOLT-FLANGED,8X14 (Ref # 130)	130BB0814	2

© 2026 Kawasaki Motors Corp., U.S.A.