2011 MULE™ 4010 DIESEL 4x4

PARTS DIAGRAM

Headlight(s)

F2710

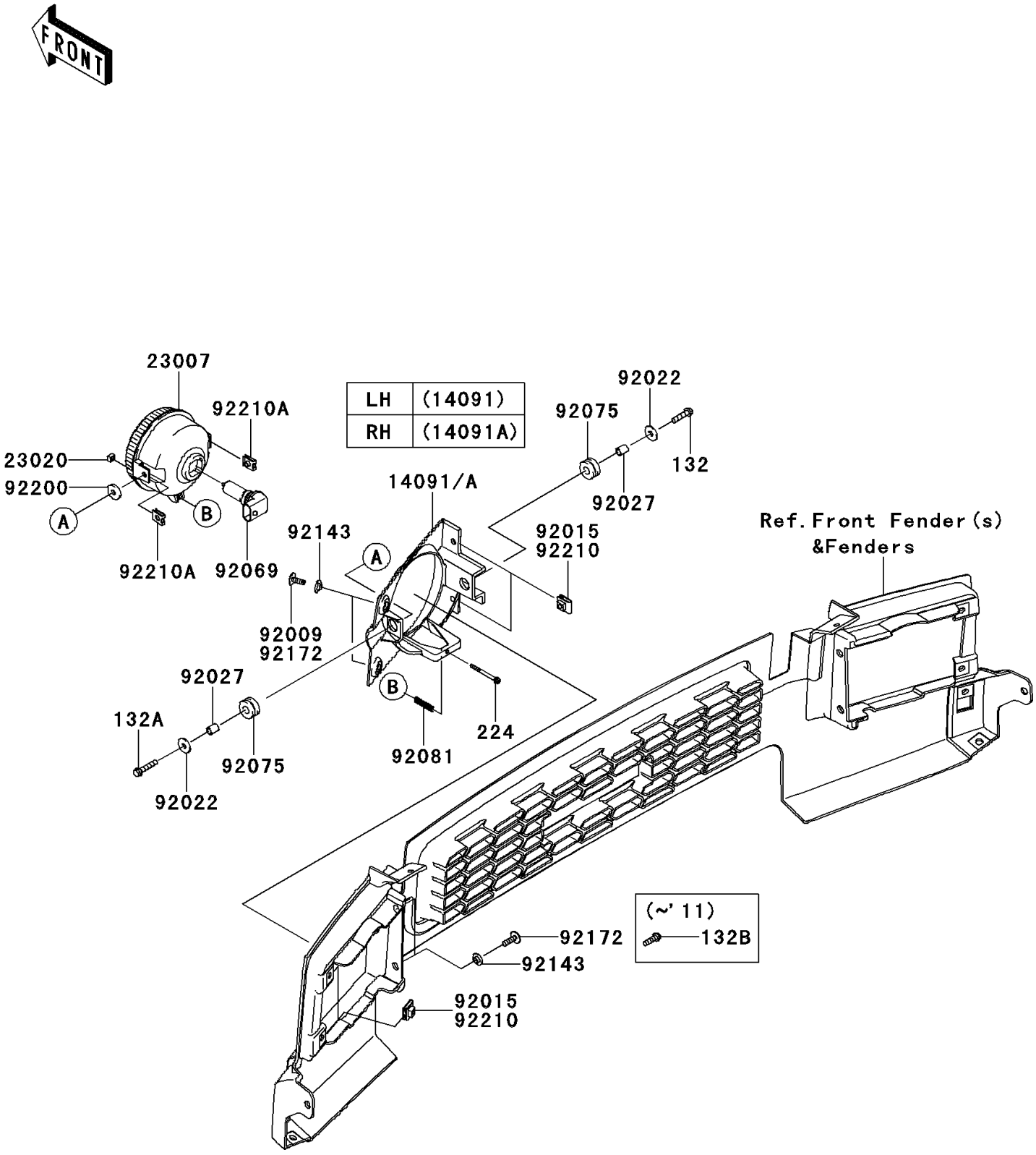

© 2026 Kawasaki Motors Corp., U.S.A.

2011 MULE™ 4010 DIESEL 4x4

PARTS LIST

Headlight(s)

ITEM NAME	PART NUMBER	QUANTITY
COVER,HEAD LAMP,LH (Ref # 14091)	14091-0827	1
COVER,HEAD LAMP,RH (Ref # 14091A)	14091-0828	1
LENS-COMP,HEAD LAMP (Ref # 23007)	23007-0096	2
NUT,4MM,FOCUS ADJUST (Ref # 23020)	23020-018	2
SCREW,6X16 (Ref # 92009)	92009-1621	4
NUT,CLAMP,6MM (Ref # 92015)	92015-1678	8
WASHER,6.5X20X1.6 (Ref # 92022)	92022-125	4
COLLAR,6.8X10X12 (Ref # 92027)	92027-162	4
BULB,12V 35/35W (Ref # 92069)	92069-0019	2
DAMPER (Ref # 92075)	92075-1690	4
SPRING,FOCUS ADJUST (Ref # 92081)	92081-1896	2
COLLAR (Ref # 92143)	92143-1087	8
WASHER,6.5X20X3.2 (Ref # 92200)	92200-0359	2
NUT (Ref # 92210A)	92210-1125	4
BOLT-FLANGED-SMALL,6X25 (Ref # 132)	132BA0625	2
BOLT-FLANGED-SMALL,6X30 (Ref # 132A)	132BA0630	2
BOLT-FLANGED-SMALL,6X20 (Ref # 132B)	132BB0620	4
SCREW-PAN-WP-CROS,4X45 (Ref # 224)	224AA0445	2

© 2026 Kawasaki Motors Corp., U.S.A.