2012 MULE™ 4010 DIESEL 4x4

PARTS DIAGRAM

Fenders(F9F-FBF)

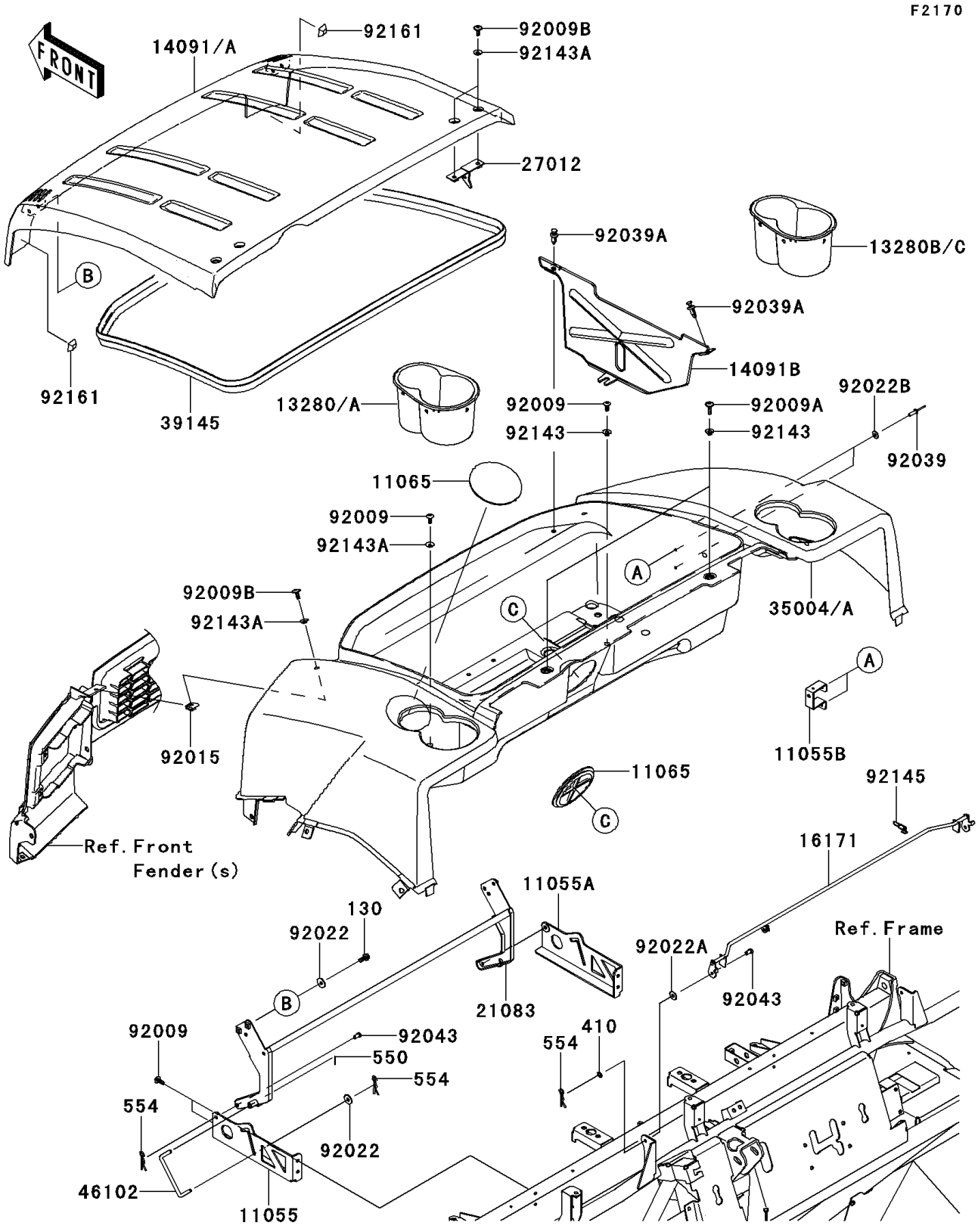

© 2026 Kawasaki Motors Corp., U.S.A.

2012 MULE™ 4010 DIESEL 4x4

PARTS LIST

Fenders(F9F-FBF)

ITEM NAME	PART NUMBER	QUANTITY

© 2026 Kawasaki Motors Corp., U.S.A.