2011 MULE™ 4010 DIESEL 4x4

PARTS DIAGRAM

Water Pump

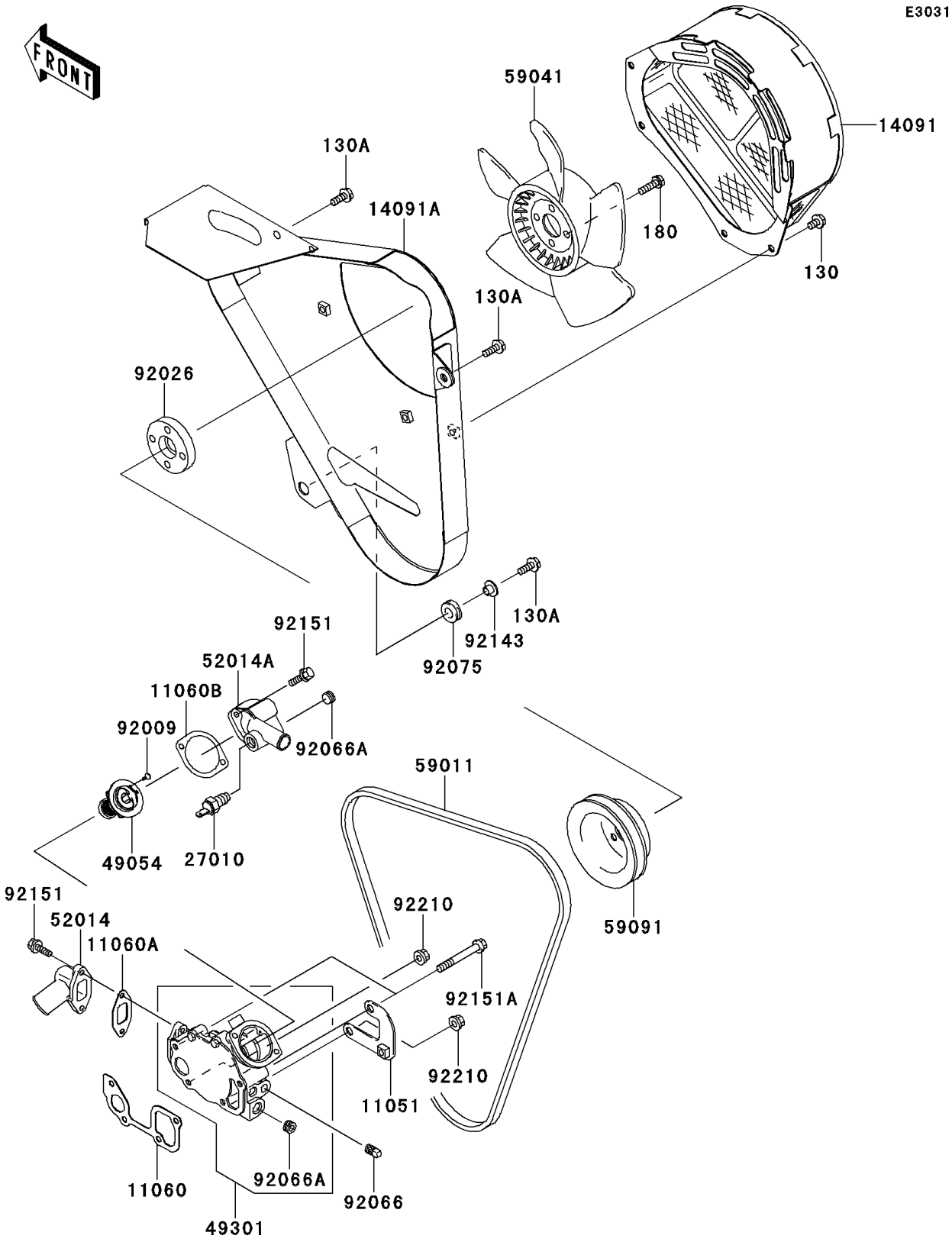

© 2026 Kawasaki Motors Corp., U.S.A.

2011 MULE™ 4010 DIESEL 4x4

PARTS LIST

Water Pump

ITEM NAME	PART NUMBER	QUANTITY
BRACKET,BELT COVER (Ref # 11051)	11051-1567	1
GASKET,WATER PUMP (Ref # 11060)	11060-1957	1
GASKET,ELBOW,INLET (Ref # 11060A)	11060-1958	1
GASKET,ELBOW,OUTLET (Ref # 11060B)	11060-1959	1
COVER,FAN (Ref # 14091)	14091-0010	1
COVER,BELT (Ref # 14091A)	14091-0126	1
SWITCH,THERMOSTAT (Ref # 27010)	27010-1414	1
THERMOSTAT (Ref # 49054)	49054-1068	1
PUMP-ASSY-WATER (Ref # 49301)	49301-0001	1
ELBOW,INLET (Ref # 52014)	52014-1095	1
ELBOW,OUTLET (Ref # 52014A)	52014-1096	1
BELT (Ref # 59011)	59011-1075	1
FAN (Ref # 59041)	59041-1060	1
PULLEY,WATER PUMP (Ref # 59091)	59091-1105	1
SCREW,TAPPING,2.6X8 (Ref # 92009)	92009-1915	1
SPACER (Ref # 92026)	92026-1571	1
PLUG,WATER PUMP (Ref # 92066)	92066-1531	1
PLUG,ELBOW OUTLET (Ref # 92066A)	92066-1532	2
DAMPER (Ref # 92075)	92075-161	1
COLLAR (Ref # 92143)	92143-1057	1
BOLT,6X20 (Ref # 92151)	92151-1667	4
BOLT,8X50 (Ref # 92151A)	92151-1690	2
NUT,8MM (Ref # 92210)	92210-1216	2
BOLT-FLANGED,6X10 (Ref # 130)	130BB0610	4
BOLT-FLANGED,6X16 (Ref # 130A)	130BB0616	3
BOLT-UPSET-WS,6X22 (Ref # 180)	180BB0622	4

© 2026 Kawasaki Motors Corp., U.S.A.