2011 MULE™ 4010 DIESEL 4x4

PARTS DIAGRAM

Fuel Injection

Kawasaki
Let the Good Times Roll®

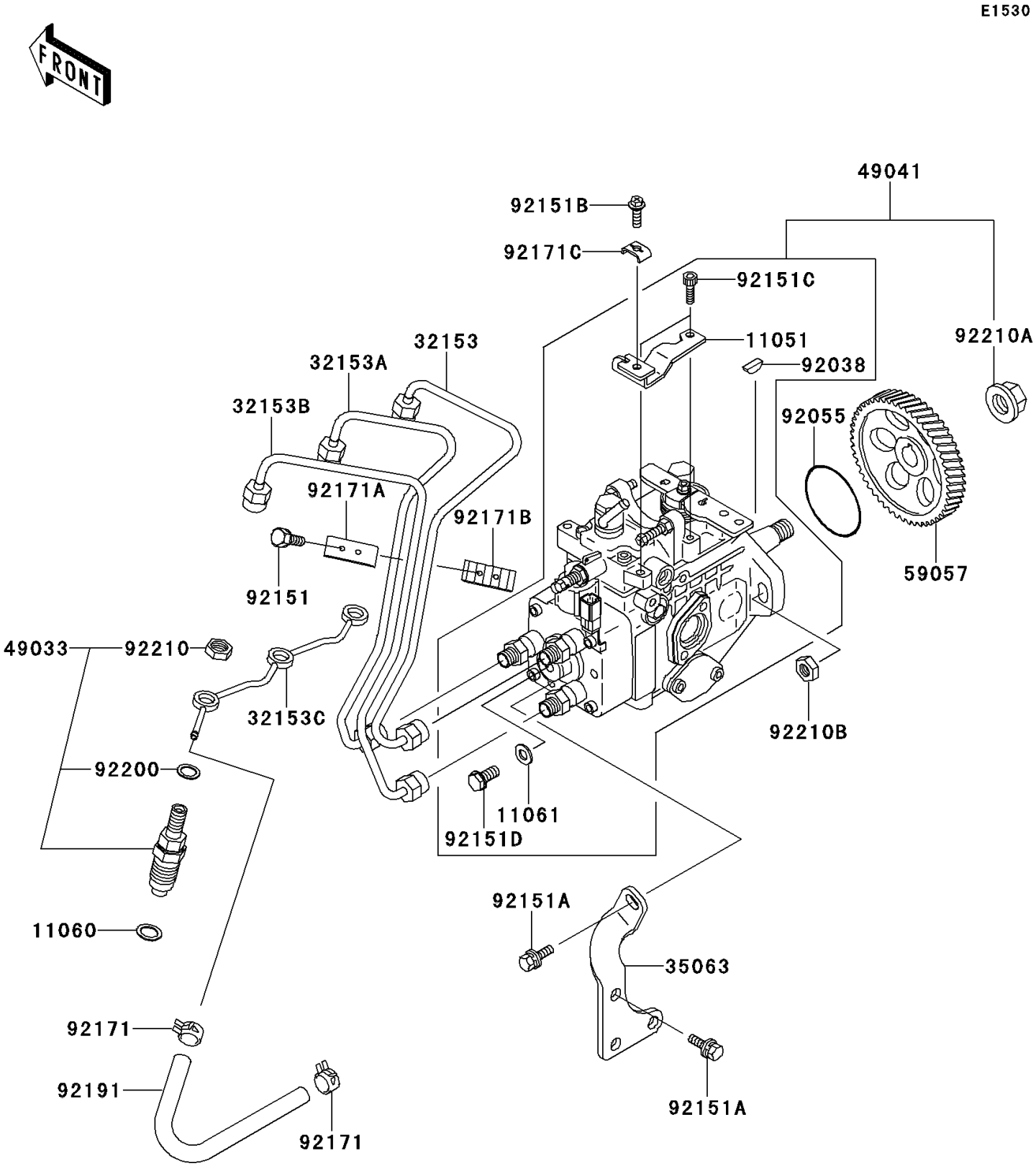

© 2026 Kawasaki Motors Corp., U.S.A.

2011 MULE™ 4010 DIESEL 4x4

PARTS LIST

Fuel Injection

ITEM NAME	PART NUMBER	QUANTITY
BRACKET,THROTTLE (Ref # 11051)	11051-1570	1
GASKET,INJECTION NOZZLE (Ref # 11060)	11060-1962	3
GASKET,INJECTION PUMP (Ref # 11061)	11061-1052	1
PIPE,RH (Ref # 32153)	32153-1190	1
PIPE,CNT (Ref # 32153A)	32153-1191	1
PIPE,LH (Ref # 32153B)	32153-1192	1
PIPE,NOZZLE LEAKAGE (Ref # 32153C)	32153-1194	1
STAY,INJECTION PUMP (Ref # 35063)	35063-1097	1
NOZZLE-INJECTION (Ref # 49033)	49033-0018	3
PUMP-INJECTION (Ref # 49041)	49041-0001	1
GEAR-HELICAL,INJECTION PUMP (Ref # 59057)	59057-1003	1
KEY (Ref # 92038)	92038-1065	1
RING-O,INJECTION PUMP (Ref # 92055)	92055-1629	1
BOLT,6X20 (Ref # 92151)	92151-1667	2
BOLT,8X20 (Ref # 92151A)	92151-1697	2
BOLT,5X20 (Ref # 92151B)	92151-1698	1
BOLT,SOCKET (Ref # 92151C)	92151-1718	2
BOLT,INJECTION PUMP (Ref # 92151D)	92151-1885	1
CLAMP,TUBE (Ref # 92171)	92171-1165	2
CLAMP,INJECTION PIPE (Ref # 92171A)	92171-1166	1
CLAMP,INJECTION PIPE (Ref # 92171B)	92171-1167	1
CLAMP,THROTTLE (Ref # 92171C)	92171-1168	1
TUBE,FUEL (Ref # 92191)	92191-1450	1
WASHER,INJECTION NOZZLE (Ref # 92200)	92200-1507	3
NUT,INJECTION NOZZLE (Ref # 92210)	92210-1220	3
NUT,14MM (Ref # 92210A)	92210-1221	1
NUT,8MM (Ref # 92210B)	92210-1222	2

© 2026 Kawasaki Motors Corp., U.S.A.