2011 MULE™ 4010 DIESEL 4x4

PARTS DIAGRAM

Air Cleaner-Belt Converter(FBF-FDF)

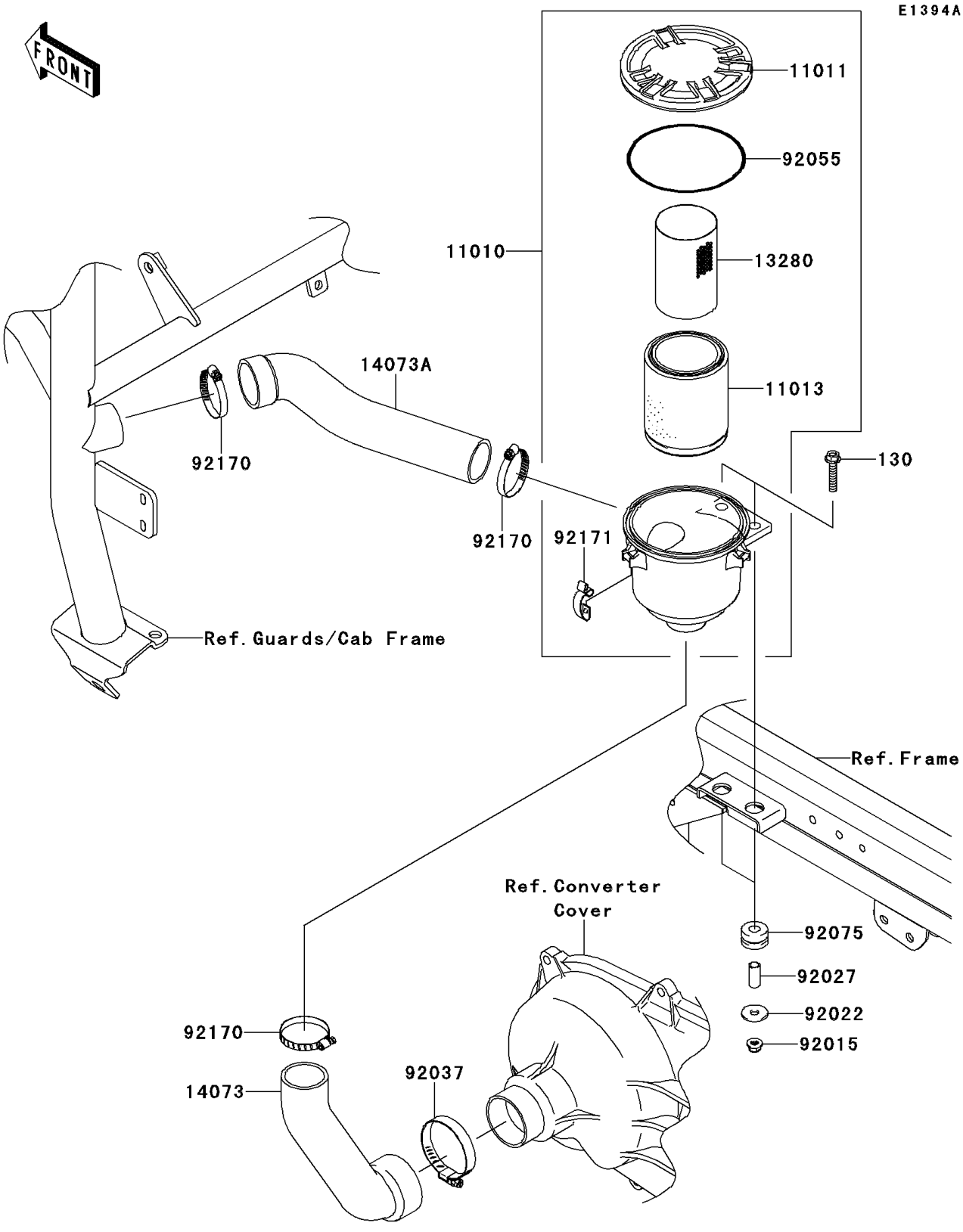

© 2026 Kawasaki Motors Corp., U.S.A.

2011 MULE™ 4010 DIESEL 4x4

Kawasaki
Let the Good Times Roll®

PARTS LIST

Air Cleaner-Belt Converter(FBF-FDF)

ITEM NAME	PART NUMBER	QUANTITY
FILTER-ASSY-AIR (Ref # 11010)	11010-0172	1
CASE-AIR FILTER,CAP (Ref # 11011)	11011-0135	1
ELEMENT-AIR FILTER (Ref # 11013)	11013-0037	1
HOLDER (Ref # 13280)	13280-0312	1
DUCT,AIR FILTER-CVT (Ref # 14073)	14073-0200	1
DUCT,BAR-AIR FILTER (Ref # 14073A)	14073-0238	1
NUT,8MM (Ref # 92015)	92015-1432	2
WASHER,9X28X2.3 (Ref # 92022)	92022-1632	2
COLLAR (Ref # 92027)	92027-4012	2
CLAMP (Ref # 92037)	92037-3738	1
RING-O,122X4 (Ref # 92055)	92055-0167	1
DAMPER (Ref # 92075)	92075-1736	2
CLAMP (Ref # 92170)	92170-1674	3
CLAMP (Ref # 92171)	92171-0225	3
BOLT-FLANGED,8X40 (Ref # 130)	130BA0840	2

© 2026 Kawasaki Motors Corp., U.S.A.