# 2011 MULE™ 4010 DIESEL 4x4

## PARTS DIAGRAM

### Converter Cover

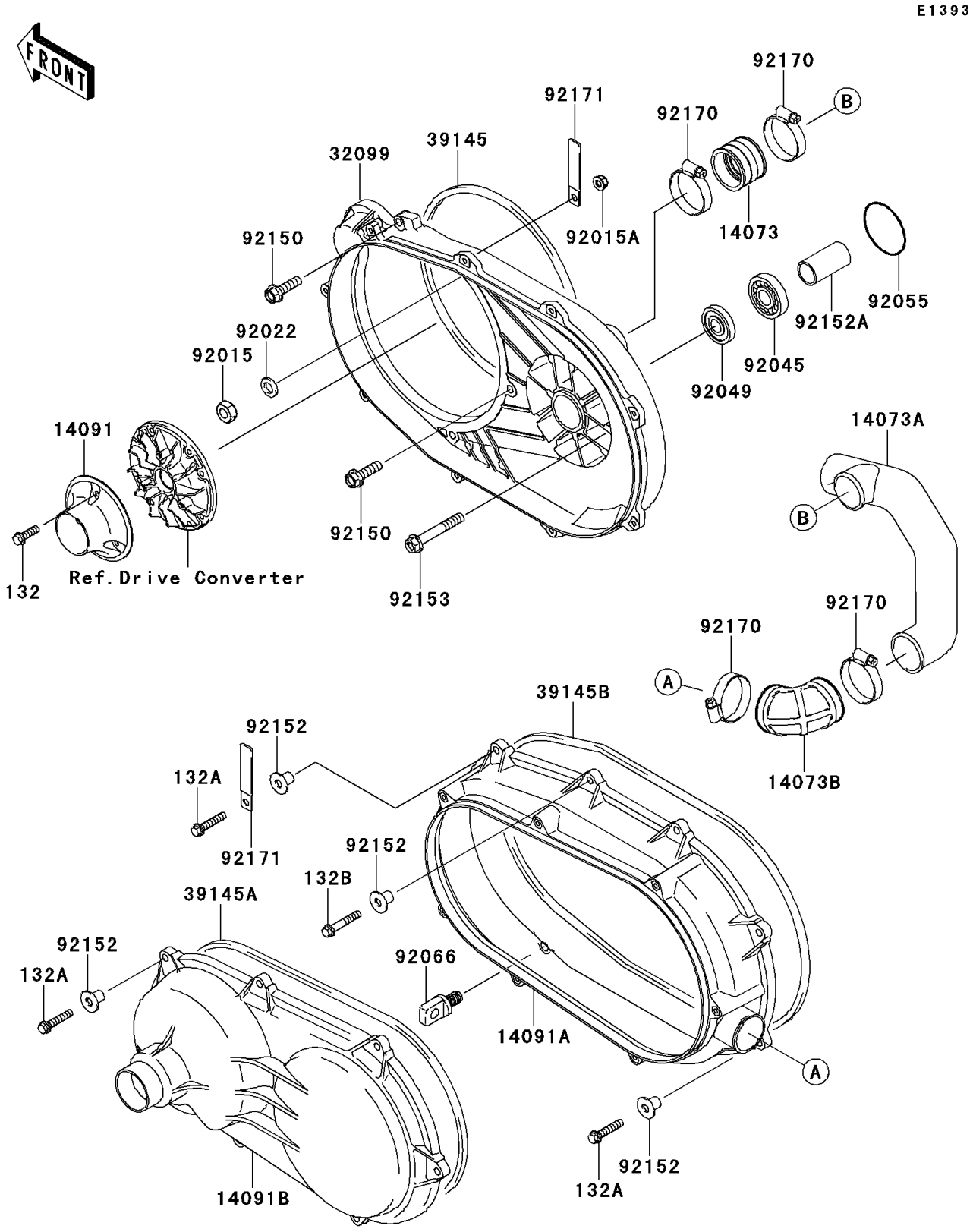


© 2026 Kawasaki Motors Corp., U.S.A.

# 2011 MULE™ 4010 DIESEL 4x4

## PARTS LIST

### Converter Cover

| ITEM NAME | PART NUMBER | QUANTITY |
|---|---|---|
| DUCT (Ref # 14073) | 14073-1324 | 1 |
| DUCT (Ref # 14073A) | 14073-1856 | 1 |
| DUCT (Ref # 14073B) | 14073-1857 | 1 |
| COVER,FAN (Ref # 14091) | 14091-1520 | 1 |
| COVER,MIDDLE (Ref # 14091A) | 14091-1555 | 1 |
| COVER,BELT CONVERTER (Ref # 14091B) | 14091-1556 | 1 |
| CASE,BELT CONVERTER (Ref # 32099) | 32099-1215 | 1 |
| TRIM-SEAL,BELT CONVERTER CASE (Ref # 39145) | 39145-1115 | 1 |
| TRIM-SEAL,MIDDLE COVER (Ref # 39145A) | 39145-1117 | 1 |
| TRIM-SEAL,BELT CONVERTER (Ref # 39145B) | 39145-1126 | 1 |
| NUT,LOCK,10MM,BLACK (Ref # 92015) | 92015-1189 | 1 |
| NUT,LOCK,FLANGED,6MM (Ref # 92015A) | 92015-1675 | 1 |
| WASHER,10.5X18X2.5 (Ref # 92022) | 92022-1876 | 1 |
| BEARING-BALL,62/28LLB/2AS (Ref # 92045) | 92045-0109 | 1 |
| SEAL-OIL,TC28X47X7 (Ref # 92049) | 92049-1297 | 1 |
| RING-O,67.6X3.5 (Ref # 92055) | 92055-1327 | 1 |
| PLUG,DRAIN,11X19 (Ref # 92066) | 92066-1580 | 1 |
| BOLT,FLANGED,8X28 (Ref # 92150) | 92150-1103 | 5 |
| COLLAR (Ref # 92152) | 92152-0667 | 16 |
| COLLAR,28.1X34X63.6 (Ref # 92152A) | 92152-1177 | 1 |
| BOLT (Ref # 92153) | 92153-1276 | 3 |
| CLAMP (Ref # 92170) | 92170-1764 | 4 |
| CLAMP (Ref # 92171) | 92171-0652 | 2 |
| BOLT-FLANGED-SMALL,6X20 (Ref # 132) | 132BA0620 | 3 |
| BOLT-FLANGED-SMALL,6X30 (Ref # 132A) | 132BB0630 | 15 |
| BOLT-FLANGED-SMALL,6X35 (Ref # 132B) | 132BB0635 | 1 |

© 2026 Kawasaki Motors Corp., U.S.A.