2011 MULE™ 4010 DIESEL 4x4

PARTS DIAGRAM

Valve(s)/Camshaft(s)

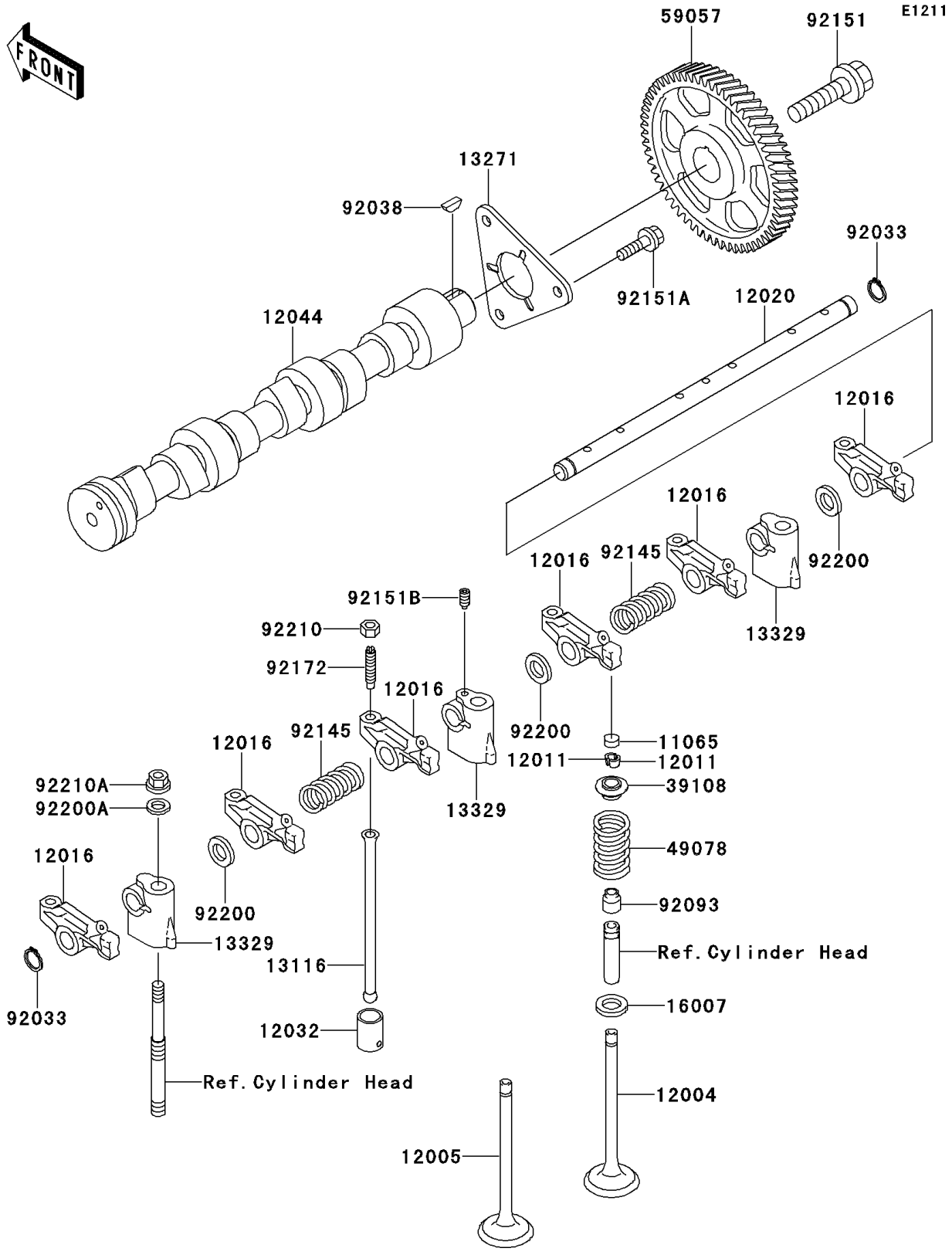

© 2026 Kawasaki Motors Corp., U.S.A.

2011 MULE™ 4010 DIESEL 4x4

PARTS LIST

Valve(s)/Camshaft(s)

ITEM NAME	PART NUMBER	QUANTITY
CAP,VALVE STEM (Ref # 11065)	11065-0117	6
VALVE-INTAKE (Ref # 12004)	12004-1145	3
VALVE-EXHAUST (Ref # 12005)	12005-1297	3
COLLET (Ref # 12011)	12011-1054	12
ARM-ROCKER (Ref # 12016)	12016-1120	6
SHAFT-ROCKER (Ref # 12020)	12020-1082	1
TAPPET (Ref # 12032)	12032-1064	6
CAMSHAFT-VALVE (Ref # 12044)	12044-1468	1
ROD-PUSH (Ref # 13116)	13116-0015	6
PLATE (Ref # 13271)	13271-1364	1
SUPPORT,ROCKER SHAFT (Ref # 13329)	13329-1001	3
SEAT-SPRING (Ref # 16007)	16007-1202	6
RETAINER-SPRING (Ref # 39108)	39108-1151	6
SPRING-ENGINE VALVE (Ref # 49078)	49078-1203	6
GEAR-HELICAL,CAMSHAFT (Ref # 59057)	59057-1001	1
RING-SNAP (Ref # 92033)	92033-1316	2
KEY (Ref # 92038)	92038-1064	1
SEAL,VALVE STEM (Ref # 92093)	92093-1521	6
SPRING,ROCKER ARM (Ref # 92145)	92145-1288	2
BOLT,10X29 (Ref # 92151)	92151-1676	1
BOLT,6X18 (Ref # 92151A)	92151-1677	3
BOLT,ROCKER SHAFT SET (Ref # 92151B)	92151-1678	1
SCREW,VALVE ADJUST (Ref # 92172)	92172-0210	6
WASHER,ROCKER ARM (Ref # 92200)	92200-1501	3
WASHER,8MM (Ref # 92200A)	92200-1502	3
NUT,VALVE ADJUST (Ref # 92210)	92210-1213	6
NUT,8MM (Ref # 92210A)	92210-1214	3

© 2026 Kawasaki Motors Corp., U.S.A.