2011 MULE™ 4010 DIESEL 4x4

PARTS DIAGRAM

Cylinder Head

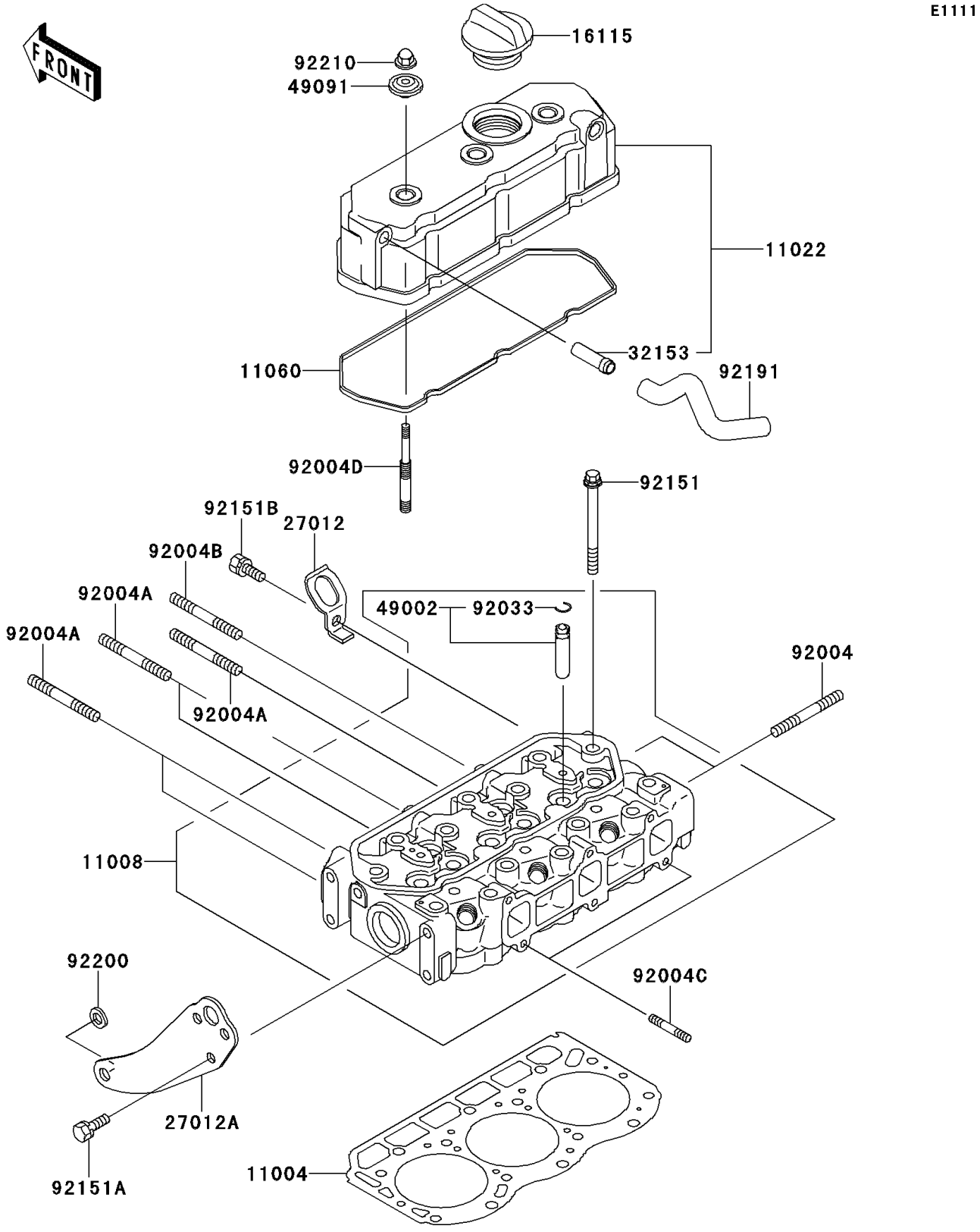

© 2026 Kawasaki Motors Corp., U.S.A.

2011 MULE™ 4010 DIESEL 4x4

PARTS LIST

Cylinder Head

ITEM NAME	PART NUMBER	QUANTITY
GASKET-HEAD (Ref # 11004)	11004-1350	1
HEAD-COMP-CYLINDER (Ref # 11008)	11008-1382	1
CASE-ROCKER (Ref # 11022)	11022-1059	1
GASKET,ROCKER CASE (Ref # 11060)	11060-1944	1
CAP-OIL FILLER (Ref # 16115)	16115-1071	1
HOOK,ENGINE,FR (Ref # 27012)	27012-1587	1
HOOK,ENGINE,LH (Ref # 27012A)	27012-1588	1
PIPE,ROCKER CASE (Ref # 32153)	32153-1180	1
GUIDE-VALVE (Ref # 49002)	49002-1142	6
WASHER-SEAL (Ref # 49091)	49091-1054	3
STUD,8X38 (Ref # 92004)	92004-1263	2
STUD,8X35 (Ref # 92004A)	92004-1264	5
STUD,8X39 (Ref # 92004B)	92004-1265	1
STUD,6X18 (Ref # 92004C)	92004-1266	2
STUD,ROCKER CASE (Ref # 92004D)	92004-1267	3
RING-SNAP,VALVE GUIDE (Ref # 92033)	92033-1315	6
BOLT,CYLINDER HEAD (Ref # 92151)	92151-1659	14
BOLT,8X16 (Ref # 92151A)	92151-1660	1
BOLT,8X18 (Ref # 92151B)	92151-1661	1
TUBE,BREATHER (Ref # 92191)	92191-1562	1
WASHER (Ref # 92200)	92200-1519	1
NUT,CAP,6MM (Ref # 92210)	92210-1209	3

© 2026 Kawasaki Motors Corp., U.S.A.