# 2008 Mule 3010 Diesel 4X4

## PARTS DIAGRAM

Meter(s)

F2530

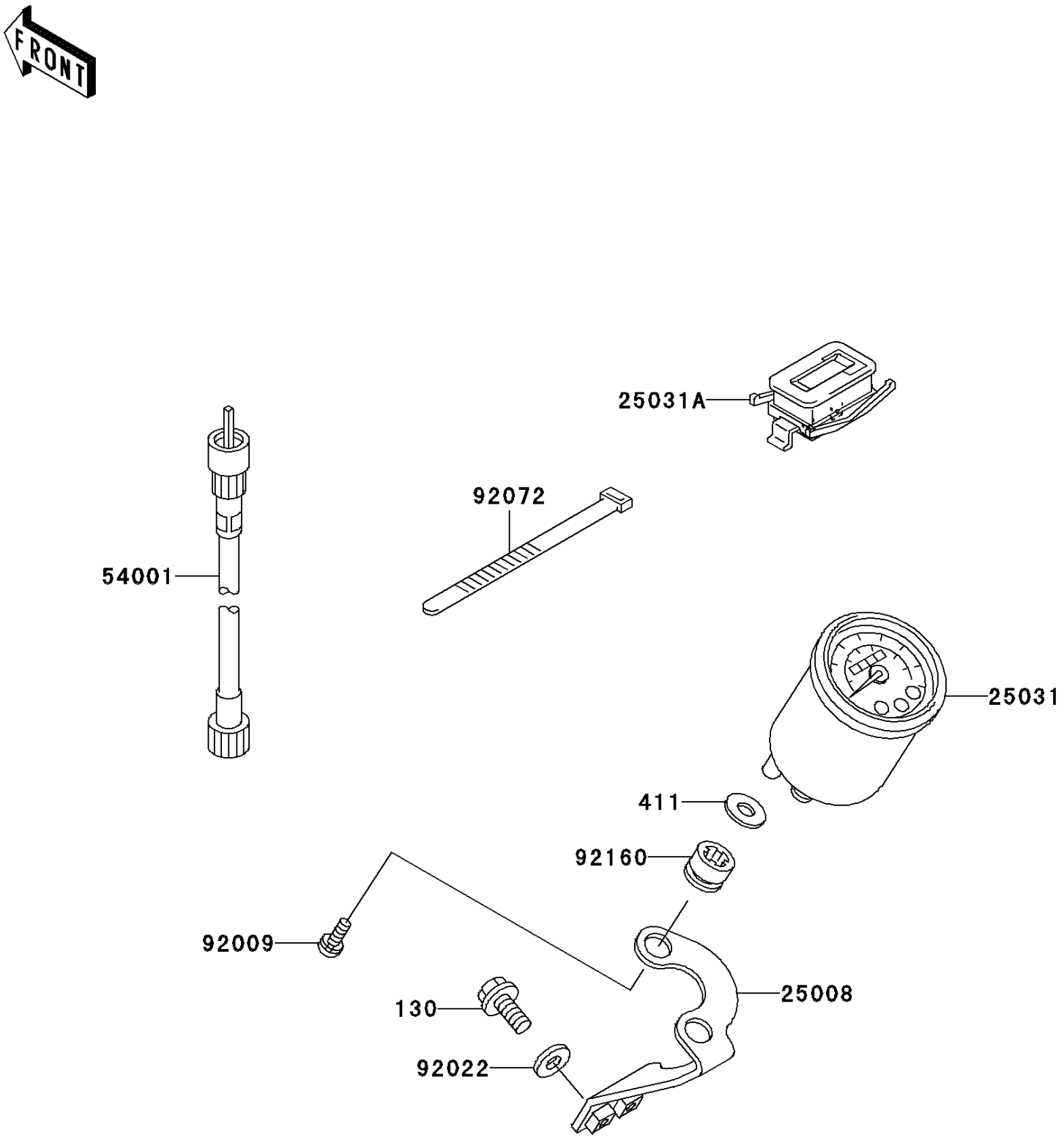


© 2026 Kawasaki Motors Corp., U.S.A.

# 2008 Mule 3010 Diesel 4X4

## PARTS LIST

Meter(s)

| ITEM NAME | PART NUMBER | QUANTITY |
|---|---|---|

© 2026 Kawasaki Motors Corp., U.S.A.