2008 Mule 3010 Diesel 4X4

PARTS DIAGRAM

Fenders

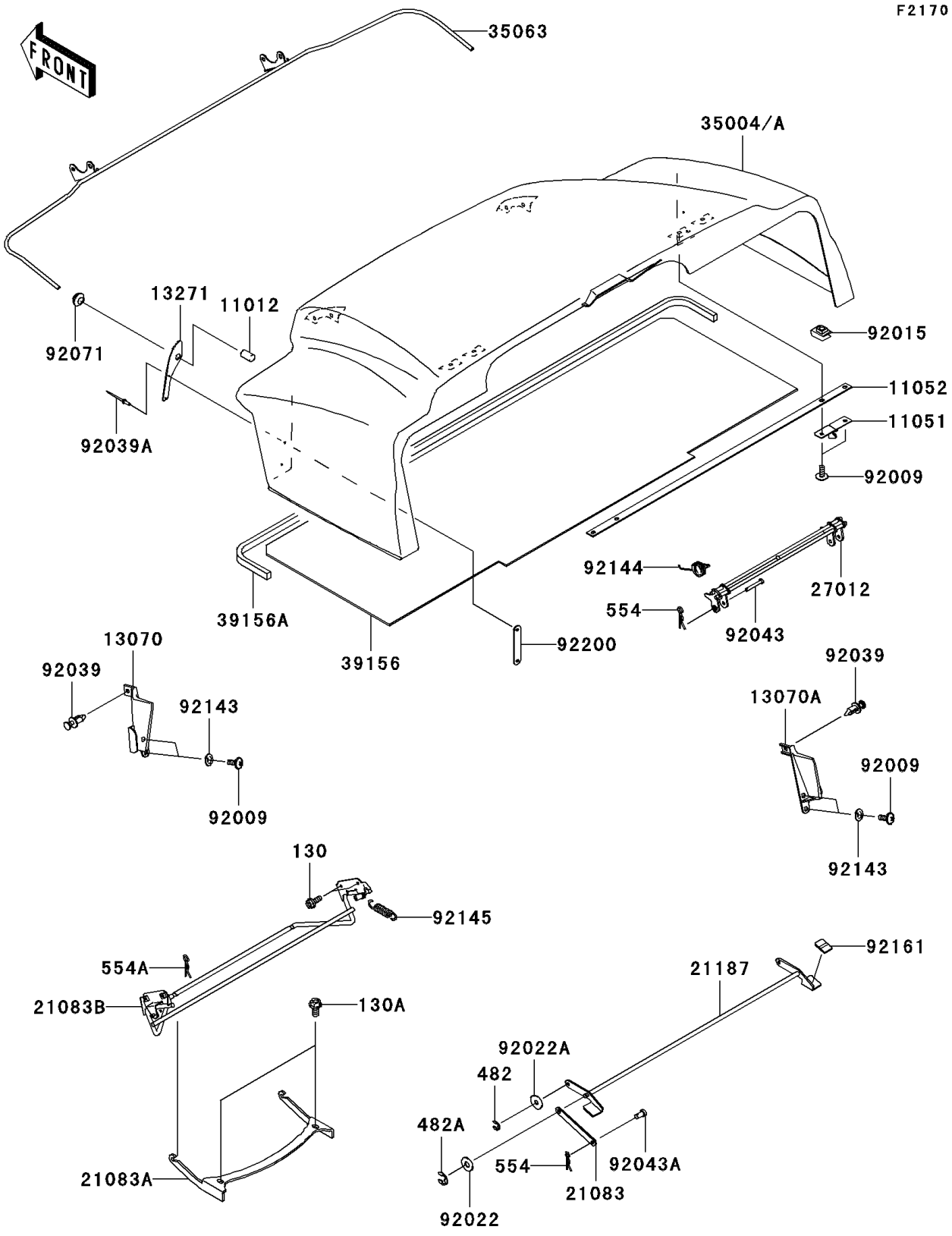

© 2026 Kawasaki Motors Corp., U.S.A.

2008 Mule 3010 Diesel 4X4

PARTS LIST

Fenders

ITEM NAME	PART NUMBER	QUANTITY
CAP (Ref # 11012)	11012-1985	2
BRACKET (Ref # 11051)	11051-1756	2
BRACKET (Ref # 11052)	11052-1369	1
GUIDE,LH (Ref # 13070)	13070-1367	1
GUIDE,RH (Ref # 13070A)	13070-1368	1
PLATE,RR (Ref # 13271)	13271-1800	2
ARM (Ref # 21083)	21083-1146	2
ARM (Ref # 21083A)	21083-1163	1
ARM (Ref # 21083B)	21083-1172	1
ARM-ASSY (Ref # 21187)	21187-1085	1
HOOK (Ref # 27012)	27012-1608	1
FENDER-FRONT,A.RED (Ref # 35004)	35004-0007-260	1
FENDER-FRONT,W.GREEN (Ref # 35004A)	35004-0007-286	1
STAY,FR FENDER (Ref # 35063)	35063-1203	1
PAD,FRONT FENDER (Ref # 39156)	39156-0014	1
PAD (Ref # 39156A)	39156-1685	1
SCREW,6X16 (Ref # 92009)	92009-1621	8
NUT,CLAMP,6MM (Ref # 92015)	92015-1678	4
WASHER,8.5X20X1.6,BLACK (Ref # 92022)	92022-1317	AR
WASHER,6.5X20X1.6,BLACK (Ref # 92022A)	92022-1346	2
RIVET (Ref # 92039)	92039-1229	2
RIVET (Ref # 92039A)	92039-1244	4
PIN,6X39 (Ref # 92043)	92043-1625	2
PIN,6X9 (Ref # 92043A)	92043-1626	2
GROMMET,10MM (Ref # 92071)	92071-019	2
COLLAR (Ref # 92143)	92143-1087	4
SPRING,SEAT HOOK (Ref # 92144)	92144-1174	2
SPRING (Ref # 92145)	92145-1335	2
DAMPER (Ref # 92161)	92161-1197	2

© 2026 Kawasaki Motors Corp., U.S.A.

2008 Mule 3010 Diesel 4X4

PARTS LIST

Fenders

ITEM NAME	PART NUMBER	QUANTITY
WASHER (Ref # 92200)	92200-1592	2
BOLT-FLANGED,6X16 (Ref # 130)	130J0616	4
BOLT-FLANGED,8X16 (Ref # 130A)	130J0816	2
CIRCLIP-TYPE-E,5MM (Ref # 482)	482L5000	2
CIRCLIP-TYPE-E (Ref # 482A)	482L7000	2
PIN-SNAP (Ref # 554)	554A0600	4
PIN-SNAP,8MM (Ref # 554A)	554A0800	2

© 2026 Kawasaki Motors Corp., U.S.A.