2011 MULE™ 4010 TRANS4x4® DIESEL

Kawasaki
Let the Good Times Roll®

PARTS DIAGRAM

Side Covers/Chain Cover

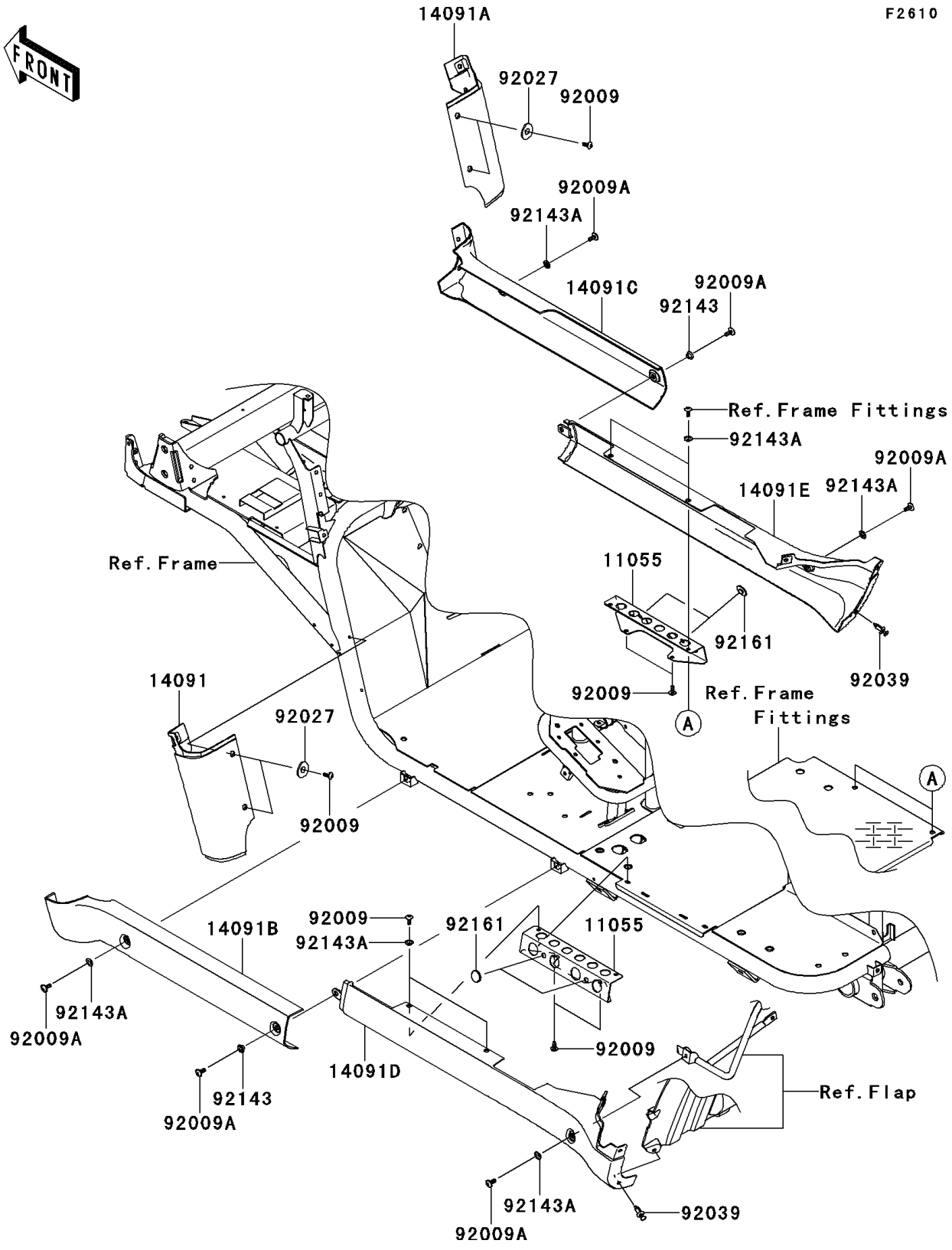

© 2026 Kawasaki Motors Corp., U.S.A.

2011 MULE™ 4010 TRANS4x4® DIESEL

Kawasaki
Let the Good Times Roll®

PARTS LIST

Side Covers/Chain Cover

ITEM NAME	PART NUMBER	QUANTITY
BRACKET (Ref # 11055)	11055-0599	2
COVER,FR FENDER,LWR,LH,F.BLACK (Ref # 14091)	14091-0821-6Z	1
COVER,FR FENDER,LWR,RH,F.BLACK (Ref # 14091A)	14091-0822-6Z	1
COVER,SIDE STEP,FR,LH,F.BLACK (Ref # 14091B)	14091-0823-6Z	1
COVER,SIDE STEP,FR,RH,F.BLACK (Ref # 14091C)	14091-0824-6Z	1
COVER,SIDE STEP,RR,LH,F.BLACK (Ref # 14091D)	14091-0825-6Z	1
COVER,SIDE STEP,RR,RH,F.BLACK (Ref # 14091E)	14091-0826-6Z	1
SCREW,TAPPING,6X16 (Ref # 92009)	92009-1166	10
SCREW,6X16 (Ref # 92009A)	92009-1621	6
COLLAR,L=4.7 (Ref # 92027)	92027-1964	4
RIVET (Ref # 92039)	92039-1229	2
COLLAR (Ref # 92143)	92143-1057	2
COLLAR (Ref # 92143A)	92143-1087	8
DAMPER,RUBBER (Ref # 92161)	92161-1200	4

© 2026 Kawasaki Motors Corp., U.S.A.