2011 MULE™ 4010 TRANS4x4® DIESEL

Kawasaki
Let the Good Times Roll®

PARTS DIAGRAM

Front Box

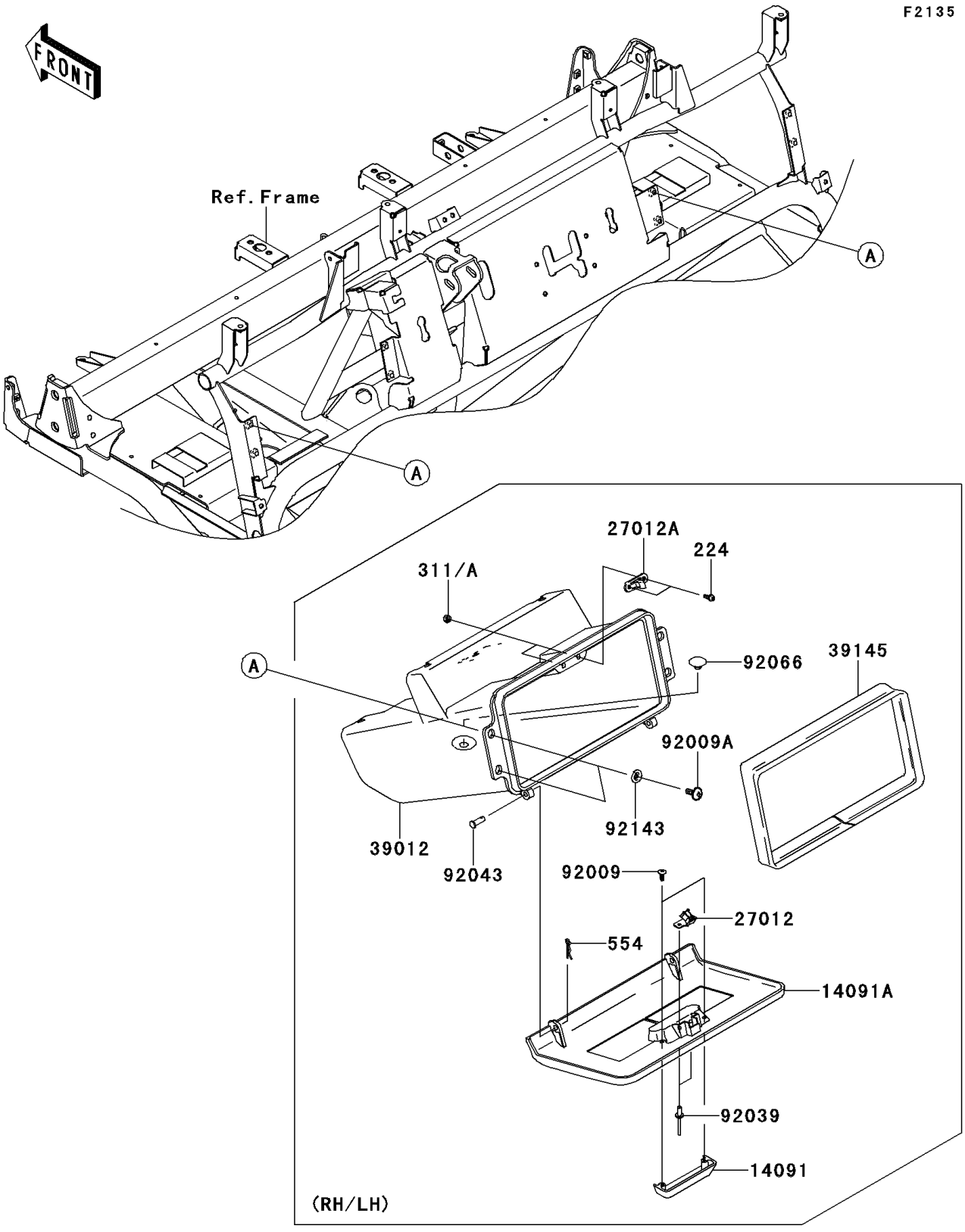

© 2026 Kawasaki Motors Corp., U.S.A.

2011 MULE™ 4010 TRANS4x4® DIESEL

Kawasaki
Let the Good Times Roll®

PARTS LIST

Front Box

ITEM NAME	PART NUMBER	QUANTITY
COVER,STORAGE GRIP,F.BLACK (Ref # 14091)	14091-1659-6Z	2
COVER,CONTROL PANEL,F.BLACK (Ref # 14091A)	14091-1660-6Z	2
HOOK (Ref # 27012)	27012-1607	2
HOOK (Ref # 27012A)	27012-1612	2
CASE-STORAGE,F.BLACK (Ref # 39012)	39012-1061-6Z	2
TRIM-SEAL,L=774 (Ref # 39145)	39145-1130	2
SCREW,TAPPING,4X12 (Ref # 92009)	92009-1444	4
SCREW,6X16 (Ref # 92009A)	92009-1621	8
RIVET (Ref # 92039)	92039-1041	4
PIN,6X14.5 (Ref # 92043)	92043-125	4
PLUG (Ref # 92066)	92066-1485	2
COLLAR (Ref # 92143)	92143-1087	8
SCREW-PAN-WP-CROS,4X12 (Ref # 224)	224AB0412	4
NUT-HEX (Ref # 311A)	311AB0400	4
PIN-SNAP (Ref # 554)	554DA0600	4

© 2026 Kawasaki Motors Corp., U.S.A.