2011 MULE™ 4010 TRANS4x4® DIESEL

Kawasaki
Let the Good Times Roll®

PARTS DIAGRAM

Engine Mount

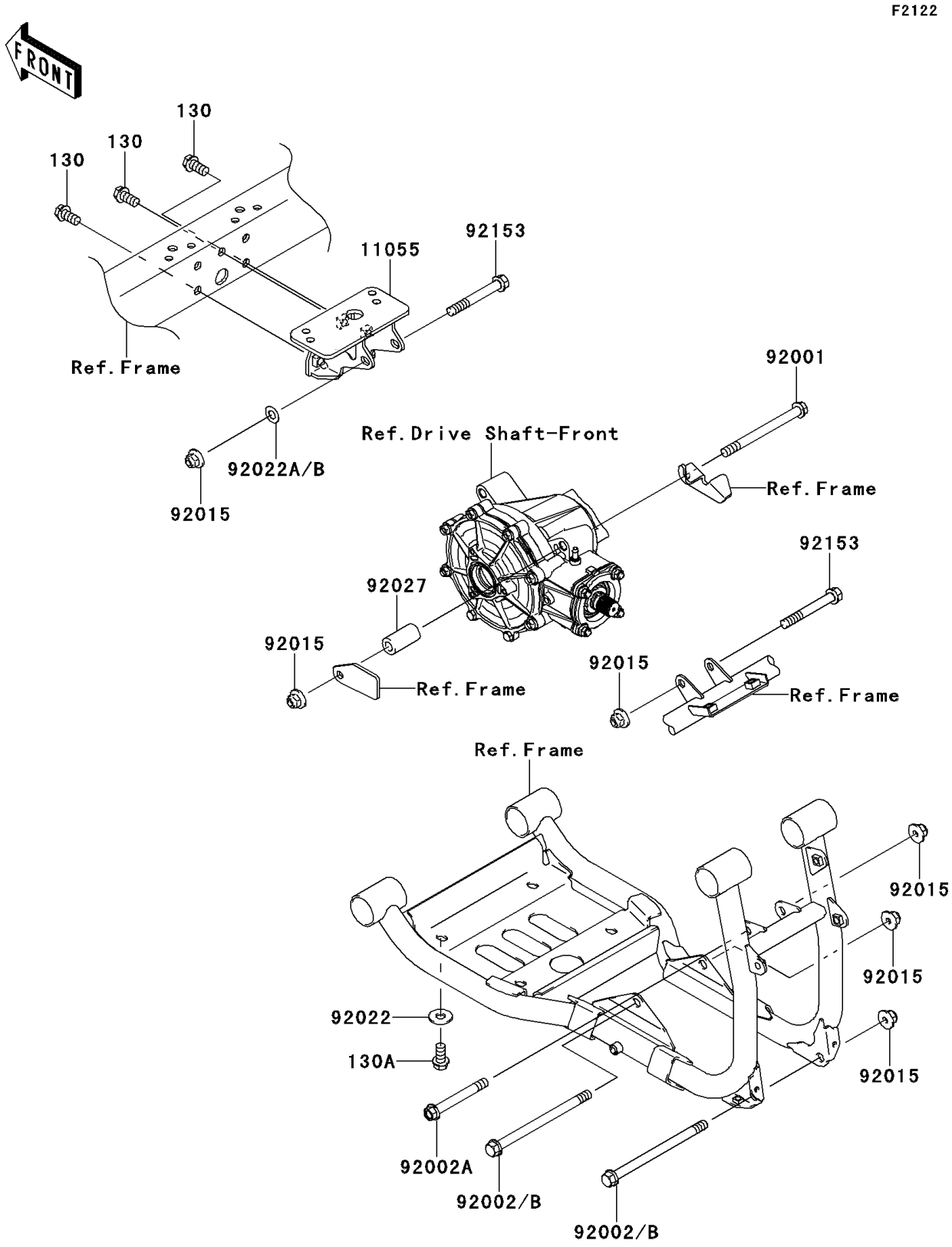

© 2026 Kawasaki Motors Corp., U.S.A.

2011 MULE™ 4010 TRANS4x4® DIESEL

Kawasaki
Let the Good Times Roll®

PARTS LIST

Engine Mount

ITEM NAME	PART NUMBER	QUANTITY
BRACKET,FRONT GEAR CASE (Ref # 11055)	11055-1469	1
BOLT,FLANGED,10X115 (Ref # 92001)	92001-1603	1
BOLT,FLANGED,10X80 (Ref # 92002A)	92002-1764	1
BOLT,FLANGED,10X145 (Ref # 92002B)	92002-1765	2
NUT,LOCK,10MM (Ref # 92015)	92015-1597	6
WASHER,10.5X26X2.3,BLACK (Ref # 92022)	92022-1396	4
WASHER,10.2X20X0.5 (Ref # 92022A)	92022-1649	AR
WASHER,10.5X20X1 (Ref # 92022B)	92022-239	AR
COLLAR,11X20X39 (Ref # 92027)	92027-1518	1
BOLT,FLANGED,10X75 (Ref # 92153)	92153-1384	2
BOLT-FLANGED,10X20 (Ref # 130)	130BA1020	3
BOLT-FLANGED,10X20 (Ref # 130A)	130BB1020	4

© 2026 Kawasaki Motors Corp., U.S.A.