# 2021 MULE™ 4010 TRANS4x4®

## PARTS DIAGRAM

### Front Box

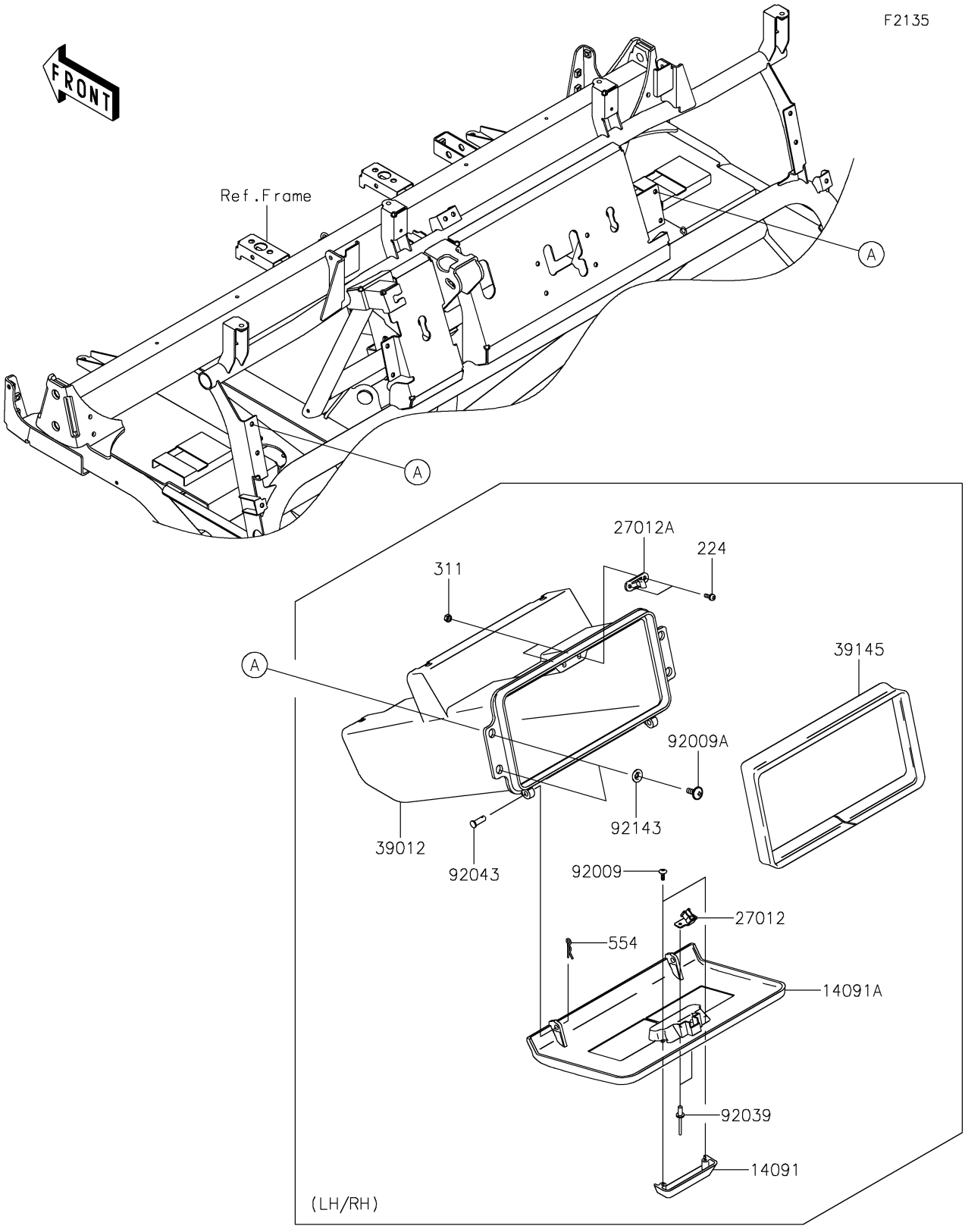


© 2026 Kawasaki Motors Corp., U.S.A.

# 2021 MULE™ 4010 TRANS4x4®

## PARTS LIST

### Front Box

| ITEM NAME | PART NUMBER | QUANTITY |
|---|---|---|
| COVER,STORAGE GRIP,F.BLACK (Ref # 14091) | 14091-1659-6Z | 2 |
| COVER,CONTROL PANEL,F.BLACK (Ref # 14091A) | 14091-1660-6Z | 2 |
| HOOK (Ref # 27012) | 27012-1607 | 2 |
| HOOK (Ref # 27012A) | 27012-1612 | 2 |
| CASE-STORAGE,F.BLACK (Ref # 39012) | 39012-1061-6Z | 2 |
| TRIM-SEAL,L=774 (Ref # 39145) | 39145-1130 | 2 |
| SCREW,TAPPING,4X12 (Ref # 92009) | 92009-1444 | 4 |
| SCREW,6X16 (Ref # 92009A) | 92009-1621 | 8 |
| RIVET (Ref # 92039) | 92039-1041 | 4 |
| PIN,6X14.5 (Ref # 92043) | 92043-125 | 4 |
| COLLAR (Ref # 92143) | 92143-1087 | 8 |
| SCREW-PAN-WP-CROS,4X12 (Ref # 224) | 224AB0412 | 4 |
| NUT-HEX,4MM (Ref # 311) | 311AA0400 | 4 |
| PIN-SNAP,1.2X21.2 (Ref # 554) | 554DA0600 | 4 |

© 2026 Kawasaki Motors Corp., U.S.A.